RST
2023
CATALOGUE

RST

SPONSORING

SPONSORED PRO RIDERS

Lukas Reiner	https://www.instagram.com/luxbiketv/
Nikolai Georgiev	https://www.instagram.com/nikki.georgiev/
Brayden Barret-Hay	https://www.instagram.com/braydenbarretthay/
Jakub Vencl	https://www.instagram.com/jakubvencl/
Remy Carra	https://www.instagram.com/remycarra/
Fred Austruy	https://www.instagram.com/fredaustruy/
Richard Fert	https://www.instagram.com/richardfert/
Elvin Hepp	https://www.instagram.com/eh_enduro/
Max Mey	https://www.instagram.com/max_mey_/
Daniel Plenk	https://www.instagram.com/daniel_plenk/
Marc Pusing	https://www.instagram.com/mtb.marcthebiker/
Joao Mendes	https://instagram.com/joaomendes95
Alec Eklow	https://www.instagram.com/ohnoimalec/
Charlie Currie	https://www.instagram.com/charliecurriemtb/
Greg Watts	https://www.instagram.com/gregwatts1987/
Jay Magee	https://www.instagram.com/feelgoodchubbz710/
Dwayne Taylor	https://www.instagram.com/therealfourtyfour/
Nic Hilton	https://www.instagram.com/nic_no_k/
Doug Minor	https://www.instagram.com/minor_threat_777/
Josh Hult	https://www.instagram.com/joshhult/
Elof Lindh	https://www.instagram.com/eloflindh/

LOCAL TEAM SUPPORT

NSD RACING	https://www.instagram.com/nsdracing/

RST TECHNOLOGY

Rider *Joao Mendes* ***Photo by*** *Filipe Ponte*

OCR Platform

Low Speed Compression control with high speed compression shim stack.

BO TNL

Blow-off damping system

Low Speed Compression with Lockout, blow off shim stack and rebound adjustment.

HCR

Hydraulic Compression with Rebound

Low Speed Compression Control with rebound adjustment

OCR Open-bath Compression Rebound Damping System

Fully adjustable hydraulic compression damping with lock-out, as well as externally adjustable rebound. This technology has been race proven and refined on the world circuit.

Tiny Remote Lockout

Smart Remote Lockout with complete new compact design . The shifter position can be adjusted vertically or horizontally with one bolt! No need to worry about any interference.

Remote Lock-out

This feature is available on any model featuring Compression/Lock-out adjustments. The remote has aluminium levers and a barrel adjuster on the cable to fine-tune your set up.

Lock-out with Rebound

Hydraulic damping cartridge with lockout and rebound adjustment.

Lock-out with Fixed-rebound

Hydraulic damping cartridge with lockout and non-adjustable rebound

Lock-out

hydraulic cartridge damping system with compression adjustment to lockout function.

Rebound Adjustment

A hydraulic adjustable cartridge that lets you externally set the forks rebound.

Mechanical Lock-out Cartridge

Mechanical lock-out system(not hydraulic)

Fixed Rebound

Hydraulic damping cartridge with non-adjustable Low speed rebound

Spring Pre-load

An adjustable top cap that lets a rider adjust the pre-load of the spring depending on rider weight and desired feel.

Front Light Integration

Front lamp holder integrated into the fork crown with one fixing bolt.

Maintains the clean look of the fork crown with a plastic protection cover when the front lamp is not used.

Post Lighting System

Front lamp holder integrated into the fork arch with two fixing bolts. Maintains the clean look of the fork arch with a plastic protection cover when the front lamp is not used.

CABLE ROUTING

Fork available with cable routing solution for a hub dynamo cable.

CONTENTS

Product Overview / Color Options / Streerer Weight 7

110 PLUS

- ROGUE 110-15 10
- TITAN 110-15 & VIBE 110-15 11
- BLADE 110-15 NEW 12
- F1RST 110-15/9 & AERIAL 110-15/9 13
- ALPHA 110-15 & ALPHA 110-9 14

JUNIOR

- F1RST 26 NEW & F1RST 24 NEW 16
- AERIAL 26/24 NEW & SNYPER 24 17
- IGNITE 24 & SPEX 20 18
- SPARK 20 & CAPA 24/20 19

CARGO

- BEAST 24 NEW 21
- PORTER 20 & GARY 20 22

ADJUST SEATPOST

- ELEV8 E & ELEV8 A2 24
- ELEV8 H-S & ELEV8 A-S 25

DH/FR/AM

- REBEL V2 27
- KILLAH 29 & KILLAH 27.5/26 28
- STITCH 29 &STITCH 27.5/26 29
- ROGUE 27.5/26 & TITAN 27.5/26 30
- STORM 27.5/26 & VIBE 27.5 31
- RENEGADE 26 & GUIDE 26/20 FAT BIKE 32
- STEM SHOCK PAVEMENT 33

CROSS COUNTRY

- REVEAL 29-15/9 35
- REVEAL 27.5-15/9 36
- F1RST 29-15/9 37
- F1RST 27.5-15/9 38
- AERIAL 29R-15 / 29-15 / 29R / 29 39
- AERIAL 27.5R-15 / 27.5-15 / 27.5R / 27.5 40
- OMEGA 29-15/27.5-15 41
- OMEGA 29/27.5/26 42
- BLAZE 29-15/9 43
- BLAZE 27.5-15/9 44
- ALEX 26 & ANGEL 26 45
- GILA 29/ 27.5/26 & CAPA 29/ 27.5/ 26 PAVEMENT 46

DIRT JUMP

- SPACE 26 48
- SLOPE 27.5/26 & DIRT 26-15/9 49

CROSS TREKKING

- PULSE 29-15 & PULSE 29 51
- PULSE 27.5-15/9 & PLS BRACKET 52
- VOGUE E-15/9 & VOGUE 53
- VIV AIR E-15/9 & VIV AIR 54
- VOLANT-15/9 & AVALON 55
- NOVA & VERSE 56
- VITA & NEON PLS 57
- NEON & URBAN 58
- SS-A8 & SS-A7 59
- SS-A2 & PILOT 60

AM PACKAGE

- AIR CARTRIDGE & GREASE 62
- AIR PUMP & WRENCH 63
- SPRING SEALS & ADJUSTER 64
- SEAL KITS & CAPS 65
- SRL UPGRADE KIT & O-RING KIT 66

DIMENSIONS 67-68

SPEC 69-88

RST GLOBAL 89

RST DISTRIBUTORS 90

 # NO RST FORK CAN USED WITH FRONT ENGINE OF COURSE EXCEPT NEON PLS & AVALON

RST PRODUCTS OVERVIEW

		Down Hill	Free Ride	All Mountain	Fat Bike	Cargo	110-15	110-9	XC 29'er	XC 27.5
Taiwan Made	$$$$$			REBEL						
		KILLAH								
			STITCH							
				ROGUE			ROGUE 110-15			
				TITAN	RENEGADE		TITAN 110-15			
			STORM							
	$$$$									
									REVEAL 29-15	REVEAL 27.5-15
									REVEAL 29	REVEAL 27.5
							F1RST 110-15	F1RST 110-9	F1RST 29-15	F1RST 27.5-15
									F1RST 29	F1RST 27.5
							AERIAL 110-15	AERIAL 110-9	AERIAL 29 R	AERIAL27.5 R
	$$$								AERIAL 29	AERIAL27.5
China Made	$$			VIBE 27.5	GUIDE 26/20	BEAST 24	VIBE 110-15	ALPHA 110-9	OMEGA 29	OMEGA 27.5
						PORTER 20	BLADE 110-15		BLAZE 29	BLAZE 27.5
						GARY 20	ALPHA 110-15		GILA 29	GILA 27.5

COLOR OPTIONS

DK-0011
GLOSS WHITE
(YS-701)

DK-0012
PEARL WHITE
(YS-775)

DK-8010
MATT BLACK
(YS-727)

DK-8011
SHINY BLACK
(YS-728)

XC 26	Dirt Jump	Leisure Sport	Junior	Cross	Trekking	E-City	SEATPOST	Stem Shock
	SPACE							
	SLOPE						ELEV 8 E	
			F1RST 26/24					
			SNYPER 24				ELEV 8 H	
			SPEX 20			VOGUE E		
			AERIAL 26/24	VOGUE		VIVAIR E		
			IGNITE 24			PULSE Air 29 / 27.5		
			SPARK 20	VIV Air		PULSE Coil 29 / 27.5	ELEV 8 A	STEM SHOCK
					SINGLE SHOCK (A)		ELEV8 A2	
OMEGA 26	DIRT	CAPA 29		VITA				
ALEX 26		CAPA 27.5		VOLANT				
GILA 26		CAPA 26	CAPA 24/20	AVALON				
ANGEL 26				NOVA	VERSE	NEON PLS		
				NEON	URBAN			

STEERER WEIGHT

Steerer Tube		Length	Weight
Aluminum 7050	28.6mm	260mm	176g
Aluminum 7050	1.5" Taper	260mm	186g
Hi-ten	28.6mm	260mm	326g
Hi-ten	25.4mm	260mm	290g
Hi-ten	1.5" Taper	260mm	415g

Rider *Frederik Usbeck*
Photo by *Jan Alwers*

29" 27.5" 34 mm 110x15 E-BIKE READY

ROGUE 110-15 mm

MODEL	AIR TRL	AIR	Air w/o Lockout
STEERER	1.5" Aluminum tapered steerer		
CROWN PITCH	150mm		
STANCHION	34mm Aluminum Hard Anodize Black		
CASTING	Magnesium		
DROPOUT	15x110mm QR Axle		
FEATURE	Hydraulic Rebound adjust, Remote Lock-out, Air Spring	Hydraulic Compression, Rebound adjust, Lock-out, Air Spring	Hydraulic Compression, Rebound adjust Air Spring
SYSTEM	OCR+(R), Air(L)		
TRAVEL (mm)	29" / 27.5"+: 120, 130, 140, 150, 160 mm		
BRAKE TYPE	Disc only		
WEIGHT (kgs) (w/ 200mm steerer)	2.35	2.33	2.33
Max Tire (w/o fender)	27.5"x3.0" or 29"x2.25"		

29" 27.5" 34 mm 110x15 E-BIKE READY

TITAN 110-15 mm

MODEL	Air TRL	Air	Air w/o Lockout
STEERER	1.5" Aluminum tapered steerer		
CROWN PITCH	150 mm		
STANCHION	34mm Aluminum Hard Anodize Black		
CASTING	Magnesium		
DROPOUT	15x110mm QR Axle		
FEATURE	Hydraulic Rebound adjust, Remote Lock-out, Air Spring	Hydraulic Compression, Rebound adjust, Lock-out, Air Spring	Hydraulic Compression, Rebound adjust, Air Spring
SYSTEM	OCR(R), Air(L)		
TRAVEL (mm)	29" / 27.5"+: 120, 130, 140, 150 mm		
BRAKE TYPE	Disc only		
WEIGHT (kgs) (w/ 200mm steerer)	2.40	2.38	2.38
Max Tire (w/o fender)	27.5"x3.0" or 29"x2.25"		

29" 27.5" 34 mm 110x15 E-BIKE READY

AIR/COIL

VIBE 110-15 mm

MODEL	RA	RL	TNL
STEERER	1.5" Steel tapered steerer		
CROWN PITCH	150 mm		
STANCHION	34mm Steel QPQ black		
CASTING	Magnesium		
DROPOUT	15x110mm Bolt Axle		
FEATURE	Hydraulic Rebound adjust	Hydraulic Remote Lock-Out	Hydraulic Lock-Out
SYSTEM	Oil(R), Coil(L) / Oil(R), Air(L)		
TRAVEL (mm)	29" / 27.5"+: 100, 120, 130, 140 mm		
BRAKE TYPE	Disc Only		
WEIGHT (kgs) (w/ 200mm steerer)	Air: 3.27 Coil: 3.47	Air: 3.36 Coil: 3.56	Air: 3.30 Coil: 3.50
Max Tire (w/o fender)	27.5"x3.0" or 29"x2.25"		

EFBE TRI-TEST EPAC MTB-AM CATEGORY 4

New 2023 ITEM

29" 27.5" 34 mm 110x15 E-BIKE READY

M5&M6 headlight bracket option

BLADE 110-15 mm 29/27.5

MODEL	RL-R	TNL-R	AIR-RL-R	AIR-TNL-R
STEERER	1.5" Steel tapered steerer			
CROWN PITCH	140 mm			
STANCHION	34mm Steel QPQ black			
CASTING	Aluminum			
DROPOUT	15x110mm Bolt Axle			
FEATURE	Hydraulic Remote Lock-Out, Rebound Adjust	Hydraulic Lock-Out, Rebound Adjust	Hydraulic Remote Lock-Out Air Spring, Rebound Adjust	Hydraulic Lock-Out Air Spring, Rebound Adjust
SYSTEM	Oil(R), Coil(L)		Oil(R), Air(L)	
, 140TRAVEL (mm)	29": 120, 130, 140, 150 mm 27.5":100, 120, 140 mm			
BRAKE TYPE	Disc Only			
WEIGHT (kgs) (w/ 200mm steerer)	29": 3.06 27.5": 3.01	29": 3.00 27.5": 2.95	29" 2.86 27.5": 2.81	29": 2.80 27.5": 2.75
Max Tire (w/o fender)	27.5"x2.6" or 29"x2.6"			

29" 27.5" 26" 32 mm 110x15 E-BIKE READY

F1RST 110-15/9 mm

MODEL	110-15 Air TRL	110-15 Air	110-9 Air TRL	110-9 Air
STEERER	28.6mm Aluminum (Optional 1.5" Aluminum tapered steerer)			
CROWN PITCH	140 mm			
STANCHION	32mm Aluminum Hard Anodize Black			
CASTING	Magnesium			
DROPOUT	15x110mm Bolt Axle		9x110mm Open Dropout	
FEATURE	Hydraulic Rebound adjust, Remote Lock-out, Air Spring	Hydraulic Compression, Rebound adjust, Lock-out, Air Spring	Hydraulic Rebound adjust, Remote Lock-out, Air Spring	Hydraulic Compression, Rebound adjust, Lock-out, Air Spring
SYSTEM	OCR(R),Air(L)			
TRAVEL (mm)	29" / 27.5"+/27.5"/ 26": 80, 100, 120 mm			
BRAKE TYPE	Disc only			
WEIGHT (kgs) (w/ 200mm steerer)	2.12	2.10	1.95	1.93
Max Tire (w/o fender)	29"x2.6" or 27.5"x2.8" or 26"x3.0"			

29" 27.5" 26" 32 mm 110x15 E-BIKE READY

AERIAL 110-15/9 mm

MODEL	RL	TNL	MLC
STEERER	28.6mm Aluminum (Optional 1.5" Aluminum tapered steerer)		
CROWN PITCH	140 mm		
STANCHION	32mm Steel QPQ black		
CASTING	Magnesium		
DROPOUT	15x110mm Bolt Axle 9x110mm Open Dropout		
FEATURE	Hydraulic Remote Lock-out, Air Spring	Hydraulic Lock-out, Air Spring	Mechanical Lock-out, Air Spring
SYSTEM	Oil (R), Air(L)		Air(L)
TRAVEL (mm)	29" / 27.5"+/27.5"/ 26": 80, 100, 120 mm		
BRAKE TYPE	Disc only		
WEIGHT (kgs) (w/ 200mm steerer)	2.55	2.47	2.27
Max Tire (w/o fender)	29"x2.6" or 27.5"x2.8" or 26"x3.0"		

29" 27.5" 32 mm 110x15 E-BIKE READY

ALPHA 110-15 mm

MODEL	RL	TNL	RA	MLC	T
STEERER	28.6mm Steel (Optional 1.5" Steel tapered steerer)				
CROWN PITCH	140 mm				
STANCHION	32mm Steel CP Finish				
CASTING	Magnesium				
DROPOUT	15x110mm Bolt Axle				
FEATURE	Hydraulic Remote Lock-Out	Hydraulic Lock-Out	Hydraulic Rebound adjust	Mechanical Lock-Out	Preload Adjust
SYSTEM	Oil(R), Coil(L)			Coil	
TRAVEL (mm)	29" / 27.5"+: 80, 100, 120, 130, 135 mm				
BRAKE TYPE	Disc Only				
WEIGHT (kgs) (w/ 200mm steerer)	2.65	2.57	2.54	2.34	2.34
Max Tire (w/o fender)	27.5"x2.8" or 29"x2.6"				

29" 27.5" 26" 32 mm E-BIKE READY

ALPHA 110-9 mm

MODEL	RL	TNL	RA	MLC	T
STEERER	28.6mm Steel (Optional 1.5" Steel tapered steerer)				
CROWN PITCH	140 mm				
STANCHION	32mm Steel CP Finish				
CASTING	Magnesium				
DROPOUT	9x110mm Open Dropout				
FEATURE	Hydraulic Remote Lock-Out	Hydraulic Lock-Out	Hydraulic Rebound adjust	Mechanical Lock-Out	Preload Adjust
SYSTEM	Oil(R), Coil(L)			Coil	
TRAVEL (mm)	29"/ 27.5"+: 80, 100, 120, 130, 140 mm 27.5"/ 26" : 80, 100, 120, 130, 140 mm				
BRAKE TYPE	Disc Only				
WEIGHT (kgs) (w/ 200mm steerer)	2.46	2.40	2.37	2.17	2.17
Max Tire (w/o fender)	29" / 27.5"+: 27.5"x2.8" or 29"x2.4" 27.5" / 26": 27.5"x2.6" or 26"x3.0"				

RST
JUNIOR

New 2023 ITEM

26" 32 mm E-BIKE READY

FIRST 26-15/9 mm

MODEL	15 TRL	15 AIR	9 TRL	9 AIR
STEERER	28.6mm Aluminum (Optional 1.5" Aluminum tapered steerer)			
CROWN PITCH	130 mm			
STANCHION	32mm Aluminum Hard Anodize Black			
CASTING	Magnesium			
DROPOUT	15mm Bolt Axle		9mm Open Dropout	
FEATURE	Hydraulic Rebound adjust, Remote Lock-out, Air Spring	Hydraulic Compression, Rebound adjust, Lock-out, Air Spring	Hydraulic Rebound adjust, Remote Lock-out, Air Spring	Hydraulic Compression, Rebound adjust, Lock-out, Air Spring
SYSTEM	BO-TNL(R), Air(L)			
TRAVEL (mm)	26": 60, 80, 100, 120 mm			
BRAKE TYPE	Disc Only			
WEIGHT (kgs) (w/ 200mm steerer)	1.72	1.70	1.67	1.65
Max Tire (w/o fender)	26"X2.4"			

New 2023 ITEM

24" 32 mm E-BIKE READY

FIRST 24-15/9 mm

MODEL	15 TRL	15 AIR	9 TRL	9 AIR
STEERER	28.6mm Aluminum (Optional 1.5" Aluminum tapered steerer)			
CROWN PITCH	130 mm			
STANCHION	32mm Aluminum Hard Anodize Black			
CASTING	Magnesium			
DROPOUT	15mm Bolt Axle		9mm Open Dropout	
FEATURE	Hydraulic Rebound adjust, Remote Lock-out, Air Spring	Hydraulic Compression, Rebound adjust, Lock-out, Air Spring	Hydraulic Rebound adjust, Remote Lock-out, Air Spring	Hydraulic Compression, Rebound adjust, Lock-out, Air Spring
SYSTEM	BO-TNL(R), Air(L)			
TRAVEL (mm)	24": 60, 80, 100, 120 mm			
BRAKE TYPE	Disc Only			
WEIGHT (kgs) (w/ 200mm steerer)	1.72	1.70	1.67	1.65
Max Tire (w/o fender)	24"X2.6"			

New 2023 ITEM

26" 24" 32 mm E-BIKE READY

AERIAL 26/24-15/9 mm

MODEL	15 RL	15 TNL	15 MLC	9 RL	9 TNL	9 MLC
STEERER	28.6mm Aluminum (Optional 1.5"" Aluminum tapered steerer)					
CROWN PITCH	130 mm					
STANCHION	32mm Steel QPQ black					
CASTING	Magnesium					
DROPOUT	15mm Bolt Axle			9mm Open Dropout		
FEATURE	Hydraulic Remote Lock-out, Air Spring	Hydraulic Lock-out, Air Spring	Mechanical Lock-out, Air Spring	Hydraulic Remote Lock-out, Air Spring	Hydraulic Lock-out, Air Spring	Mechanical Lock-out, Air Spring
SYSTEM	Oil(R), Air(L)		Air	Oil(R), Air(L)		Air
TRAVEL (mm)	26"/24": 60, 80, 100, 120 mm					
BRAKE TYPE	Disc Only					
WEIGHT (kgs) (w/ 200mm steerer)	2.12	2.10	1.90	2.07	2.05	1.85
Max Tire (w/o fender)	24"x2.6"or 26"x2.4"					

24" 32 mm E-BIKE READY

SNYPER 24

MODEL	24 TRL	24
STEERER	28.6mm Aluminum (Optional 1.5" Aluminum tapered steerer)	
CROWN PITCH	130 mm	
STANCHION	32mm Aluminum Hard Anodize Black	
CASTING	Magnesium	
DROPOUT	9mm Open Dropout	
FEATURE	Hydraulic Rebound adjust, Remote Lock-out, Air Spring	Hydraulic Compression, Rebound adjust, Lock-out, Air Spring
SYSTEM	OCR(R), Air(L)	
TRAVEL (mm)	24": 60, 70, 80, 100, 120 mm	
BRAKE TYPE	Disc Only	
WEIGHT (kgs) (w/ 200mm steerer)	1.87	1.85
Max Tire (w/o fender)	24"X2.2"	

24" 32 mm E-BIKE READY

IGNITE 24

MODEL	RL	TNL	MLC
STEERER	28.6mm Aluminum (Optional 1.5" Aluminum tapered steerer)		
CROWN PITCH	130 mm		
STANCHION	32mm Steel QPQ black		
CASTING	Magnesium		
DROPOUT	9mm Open Dropout		
FEATURE	Hydraulic Remote Lock-out, Air Spring	Hydraulic Lock-out, Air Spring	Mechanical Lock-out, Air Spring
SYSTEM	TNL-F(R), Coil (L)		Air
TRAVEL (mm)	24": 80, 100, 120 mm		
BRAKE TYPE	Disc Only		
WEIGHT (kgs) (w/ 200mm steerer)	2.31	2.25	2.05
Max Tire (with fender)	24"X2.2"		

20" 30 mm E-BIKE READY

SPEX 20-15/9 mm

MODEL	15 TRL	15 AIR	9 TRL	9 AIR
STEERER	28.6mm Aluminum			
CROWN PITCH	125 mm			
STANCHION	30mm Aluminum Hard Anodize Black			
CASTING	Magnesium			
DROPOUT	15mm Bolt Axle		9mm Open Dropout	
FEATURE	Hydraulic Rebound adjust Remote Lock-out, Air Spring	Hydraulic Compression, Rebound adjust, Lock-out, Air Spring	Hydraulic Rebound adjust Remote Lock-out, Air Spring	Hydraulic Compression, Rebound adjust, Lock-out, Air Spring
SYSTEM	OCR(R), Air(L)			
TRAVEL (mm)	20": 60, 80, 100 mm			
BRAKE TYPE	Disc or Disc & V-brake			
WEIGHT (kgs) (w/ 200mm steerer)	1.72	1.70	1.67	1.65
Max Tire (w/o fender)	20"x2.4"			

20" 30 mm E-BIKE READY

SPARK 20-15/9mm

MODEL	15 RL	15 TNL	9 RL	9 TNL
STEERER	28.6mm Aluminum			
CROWN PITCH	125 mm			
STANCHION	30mm Steel QPQ black			
CASTING	Magnesium			
DROPOUT	15mm Bolt Axle		9mm Open Dropout	
FEATURE	Hydraulic Remote Lock-out, Air Spring	Hydraulic Lock-out, Air Spring	Hydraulic Remote Lock-out, Air Spring	Hydraulic Lock-out, Air Spring
SYSTEM	TNL-F(R), Air(L)		TNL-F(R), Air(L)	
TRAVEL (mm)	20": 60, 80, 100 mm			
BRAKE TYPE	Disc or Disc & V-brake			
WEIGHT (kgs) (w/ 200mm steerer)	2.31	2.25	2.26	2.20
Max Tire (w/o fender)	20"X2.4"			

24" 20" 25.4 mm

CAPA 24/20

MODEL	MLC 24	T24	T20
STEERER	28.6 / 25.4mm Steel		
CROWN PITCH	120 mm		
STANCHION	25.4mm Steel CP Finish		
CASTING	Aluminum		
DROPOUT	9mm Open Dropout		
FEATURE	Mechanical Lock-Out	Preload Adjust	
SYSTEM	Coil		
TRAVEL (mm)	24" :50 mm	24" :30, 50 mm	20":30,50 mm
BRAKE TYPE	Disc or Disc & V-brake		
WEIGHT (kgs) (w/ 200mm steerer)	1.93	1.84	1.75
Max Tire (w/o fender)	24"X2.2"		20"X2.2"

OLD SCHOOL
RSF
CARGO

New 2023 ITEM

24" 36 mm E-BIKE READY

BEAST 24-15 mm

MODEL	15 R	15 T
STEERER	1.5" Steel tapered steerer	
CROWN PITCH	135mm	
STANCHION	36mm Steel CP Finsh	
CASTING	Aluminum	
DROPOUT	15mm Blot Axle	
FEATURE	Hydraulic Rebound-fixed	Preload Adjust
SYSTEM	Oil(R), Coil(L)	Coil
TRAVEL (mm)	24": 50,60,70mm	
BRAKE TYPE	Disc Only	
WEIGHT (kgs) (w/ 200mm steerer)	2.95	3.00
Max Tire (w/o fender)	24"X2.6"	

20" 30 mm E-BIKE READY

PORTER 20

MODEL	15T	9T
STEERER	28.6mm Cr-mo steel	
CROWN PITCH	125 mm	
STANCHION	30mm Steel CP Finsh	
CASTING	Magnesium	
DROPOUT	15mm Bolt Axle	9mm Open Dropout
FEATURE	Preload Adjust	
SYSTEM	Coil	
TRAVEL (mm)	20": 40, 60, 80 mm	
BRAKE TYPE	Disc or Disc & V-brake	
WEIGHT (kgs) (w/ 200mm steerer)	2.14	2.09
Max Tire (w/o fender)	20"X2.4"	

20" 28.6 mm

GARY 20

MODEL	20T
STEERER	28.6mm Steel
CROWN PITCH	125 mm
STANCHION	28.6mm Steel CP Finish
CASTING	Aluminum
DROPOUT	9mm Open Dropout
FEATURE	Preload Adjust
SYSTEM	Coil
TRAVEL (mm)	20": 50 mm
BRAKE TYPE	Disc & V-brake
WEIGHT (kgs) (w/ 200mm steerer)	2.17
Max Tire (w/o fender)	20"X2.6"

RST

ADJUSTABLE SEATPOST

Rider *Dominik Puffer*
Photo by *Benjamin Jicha*

ELEV8 E

MODEL	ELEV 8 E
FUNCTION	Hydraulic Height Adjustment Seat Post
TRAVEL	100. 125, 150 mm
FEATURE	Electronic Remote Operated
DIAMETER	30.9/ 31.6 mm
LENGTH (TRAVEL/ LENGTH)	TR100: 420mm TR125: 445mm TR150: 510mm
WEIGHT	700-710g (30.9mm) 710-720g (31.6mm)

ELEV8 A2

MODEL	ELEV 8 A2	ELEV 8 A2-0
FUNCTION	Air Height Adjustment Seat Post	
TRAVEL	80,100. 125, 150, 170 mm	
FEATURE	Stealth Air Remote Operated, 10mm setback	Stealth Air Remote Operated, Inline
DIAMETER	30.9/ 31.6 mm	
LENGTH (TRAVEL/ LENGTH)	TR 80: 320mm TR100: 364mm TR125: 413mm TR150 :463mm TR170: 496mm	
WEIGHT	635-645g (30.9mm) 645-655g (31.6mm)	

ELVE8 H-S

MODEL	ELEV 8 H	ELEV 8 H-S
FUNCTION	Hydraulic Height Adjustment Seat Post	
TRAVEL	100. 125, 150 mm	
FEATURE	External Hydraulic Remote Operated	Stealth Hydraulic Remote Operated
DIAMETER	30.9/ 31.6 mm	
LENGTH (TRAVEL/ LENGTH)	TR100: 365mm TR125: 414mm TR150: 439mm	
WEIGHT	735-745g (30.9mm) 745-755g (31.6mm)	685-695g (30.9mm) 695-705g (31.6mm)

ELEV8 A-S

MODEL	ELEV 8 A	ELEV 8 A-S
FUNCTION	Air Height Adjustment Seat Post	
TRAVEL	100. 125, 150 mm	
FEATURE	External Air Remote Operated	Stealth Air Remote Operated
DIAMETER	30.9/ 31.6 mm	
LENGTH (TRAVEL/ LENGTH)	TR100: 344mm TR125: 418mm TR150: 444mm	
WEIGHT	685-695g (30.9mm) 695-705g (31.6mm)	635-645g (30.9mm) 645-655g (31.6mm)

RST

DH/FR/AM

Steep descents and technical terrain require top-performance from both riders and their equipment.
Durable construction without a major weight penalty and high performance damping systems distinguish these forks ready for the trail, bike park, even a World Cup course.

Rider *Jan Alwers*
Photo by *Jan Alwers*

29" 27.5" 32 mm 110×15 110×20 E-BIKE READY

REBEL V2

MODEL	AIR TRL	AIR	Air w/o Lockout
STEERER	1.5" Aluminum tapered steerer		
CROWN PITCH	140 mm		
STANCHION	32mm Aluminum Hard Anodize Black		
CASTING	Magnesium		
DROPOUT	20x110mm Boost Bolt Axle (Optional 15x110mm Bolt Axle)		
FEATURE	Hydraulic Rebound adjust, Remote Lock-out, Air Spring	Hydraulic Compression, Rebound adjust, Lock-out, Air Spring	Hydraulic Compression, Rebound adjust, Air Spring
SYSTEM	OCR+(R), Air(L)		
TRAVEL (mm)	29"/27.5"+:80, 100, 130,140, 150 mm		
BRAKE TYPE	Disc only		
WEIGHT (kgs) (w/ 200mm steerer)	2.35	2.33	2.33
Max Tire (w/o fender)	27.5"x3.0" or 29"x2.4"		

29" 38 mm 110x20 E-BIKE READY

KILLAH 29

MODEL	COIL	AIR
STEERER	28.6mm Aluminum	
CROWN PITCH	145 mm-Dual	
STANCHION	38mm Aluminum Hard Anodize Black	
CASTING	Magnesium	
DROPOUT	20x110mm Boost Bolt Axle	
FEATURE	Hydraulic Compression, Rebound adjust	Hydraulic Compression, Rebound adjust, Air Spring
SYSTEM	OCR+(R), Coil(L)	OCR+(R), Air(L)
TRAVEL (mm)	29": 200 mm	
BRAKE TYPE	Disc only	
WEIGHT (kgs) (w/ 200mm steerer)	3.25	3.05
Max Tire (w/o fender)	29"x2.6"	

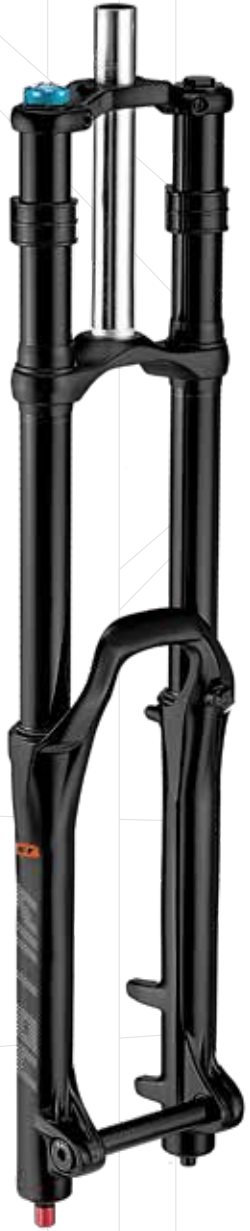

27.5" 26" 36 mm E-BIKE READY

KILLAH 27.5/26

MODEL	COIL	AIR
STEERER	28.6mm Aluminum	
CROWN PITCH	138 mm-Dual	
STANCHION	36mm Aluminum Hard Anodize Black	
CASTING	Magnesium	
DROPOUT	20mm Bolt Axle	
FEATURE	Hydraulic Compression, Rebound adjust	Hydraulic Compression, Rebound adjust, Air Spring
SYSTEM	OCR+(R), Coil(L)	OCR+(R), Air(L)
TRAVEL (mm)	27.5" / 26": 200 mm	
BRAKE TYPE	Disc Only	
WEIGHT (kgs) (w/ 200mm steerer)	27.5": 3.22 26": 3.20	27.5": 3.02 26": 3.00
Max Tire (w/o fender)	27.5"x2.4" or 26"x2.4"	

29" 38 mm 110×15 110×20 E-BIKE READY

STITCH 29

MODEL	COIL	AIR
STEERER	1.5" Aluminum tapered steerer	
CROWN PITCH	145 mm	
STANCHION	38mm Aluminum Hard Anodize Black	
CASTING	Magnesium	
DROPOUT	20x110mm Boost Bolt Axle or 15x110mm Bolt Axle	
FEATURE	Hydraulic Compression, Rebound adjust	Hydraulic Compression, Rebound adjust, Air Spring
SYSTEM	OCR+(R), Coil(L)	OCR+(R), Air(L)
TRAVEL (mm)	29": 160, 170, 180 mm	
BRAKE TYPE	Disc Only	
WEIGHT (kgs) (w/ 200mm steerer)	2.88	2.68
Max Tire (w/o fender)	29"x2.6"	

EFBE TRI-TEST EPAC MTB-AM CATEGORY 4

27.5" 26" 36 mm E-BIKE READY

STITCH 27.5/26

MODEL	COIL	AIR
STEERER	28.6mm Aluminum (Optional 1.5" Aluminum tapered steerer)	
CROWN PITCH	138 mm	
STANCHION	36mm Aluminum Hard Anodize Black	
CASTING	Magnesium	
DROPOUT	20mm QR Axle	
FEATURE	Hydraulic Compression, Rebound adjust	Hydraulic Compression, Rebound adjust, Air Spring
SYSTEM	OCR+(R), Coil(L)	OCR+(R), Air(L)
TRAVEL (mm)	27.5" / 26": 160, 170, 180 mm	
BRAKE TYPE	Disc Only	
WEIGHT (kgs) (w/ 200mm steerer)	27.5": 2.57 26": 2.55	27.5": 2.28 26": 2.26
Max Tire (w/o fender)	27.5"x2.4" or 26"x2.4"	

27.5" 26" 34 mm E-BIKE READY

ROGUE 27.5/26

MODEL	Air TRL	Air	Air w/o Lockout
STEERER	28.6mm Aluminum (Optional 1.5" Aluminum tapered steerer)		
CROWN PITCH	130 mm		
STANCHION	34mm Aluminum Hard Anodize Black		
CASTING	Magnesium		
DROPOUT	15mm QR Axle		
FEATURE	Hydraulic Rebound adjust, Remote Lock-out, Air Spring	Hydraulic Compression, Rebound adjust, Lock-out, Air Spring	Hydraulic Compression, Rebound adjust, Air Spring
SYSTEM	OCR+(R), Air(L)		
TRAVEL (mm)	27.5" / 26": 140, 150, 160 mm		
BRAKE TYPE	Disc Only		
WEIGHT (kgs) (w/ 200mm steerer)	27.5": 2.13 26": 2.00	27.5": 2.11 26": 1.98	27.5": 2.11 26": 1.98
Max Tire (w/o fender)	27.5"x2.4" or 26"x2.4"		

27.5" 26" 34 mm E-BIKE READY

TITAN 27.5/26

MODEL	Air TRL	Air	Air w/o Lockout
STEERER	28.6mm Aluminum (Optional 1.5" Aluminum tapered steerer)		
CROWN PITCH	130 mm		
STANCHION	34mm Aluminum Hard Anodize Black		
CASTING	Magnesium		
DROPOUT	15mm QR Axle		
FEATURE	Hydraulic Rebound adjust, Remote Lock-out, Air Spring	Hydraulic Compression, Rebound adjust, Lock-out, Air Spring	Hydraulic Compression, Rebound adjust, Air Spring
SYSTEM	OCR(R), Air(L)		
TRAVEL (mm)	27.5" / 26": 140, 150 mm		
BRAKE TYPE	Disc Only		
WEIGHT (kgs) (w/ 200mm steerer)	27.5": 2.18 26": 2.05	27.5": 2.16 26": 2.03	27.5": 2.16 26": 2.03
Max Tire (w/o fender)	27.5"x2.4" or 26"x2.4"		

27.5" 26" 36 mm E-BIKE READY

STORM 27.5/26

MODEL	RA
STEERER	28.6mm Cr-mo Steel (Optional 1.5" Aluminum tapered steerer)
CROWN PITCH	138 mm
STANCHION	36mm Steel QPQ Black
CASTING	Magnesium
DROPOUT	20mm QR Axle
FEATURE	Hydraulic Rebound adjust
SYSTEM	Oil(R), Coil(L)
TRAVEL (mm)	27.5" / 26": 160, 170, 180 mm
BRAKE TYPE	Disc Only
WEIGHT (kgs) (w/ 200mm steerer)	27.5": 3.34 26": 3.32
Max Tire (w/o fender)	27.5"x2.4" or 26"x2.4"

27.5" 34 mm E-BIKE READY

VIBE 27.5

MODEL	RA	RL	TNL	AIR-RA	AIR-RL	AIR-TNL
STEERER	1.5" Steel tapered steerer					
CROWN PITCH	130 mm					
STANCHION	34mm Steel QPQ black					
CASTING	Magnesium					
DROPOUT	15mm Bolt Axle					
FEATURE	Hydraulic Rebound adjust	Hydraulic Remote Lock-Out	Hydraulic Lock-Out	Hydraulic Rebound adjust Air Spring	Hydraulic Remote Lock-Out Air Spring	Hydraulic Lock-Out Air Spring
SYSTEM	Oil(R), Coil(L)			Oil(R), Air(L)		
TRAVEL (mm)	27.5": 130, 140 mm					
BRAKE TYPE	Disc Only					
WEIGHT (kgs) (w/ 200mm steerer)	3.14	3.23	3.17	2.88	2.97	2.91
Max Tire (w/o fender)	27.5"x2.4"					

EFBE TRI-TEST EPAC MTB-AM CATEGORY 4

26" 32 mm E-BIKE READY

RENEGADE 26

MODEL	Air TRL	Air	TNL
STEERER	28.6mm Aluminum (Optional 1.5" Aluminum tapered steerer)		1.5" Steel tapered steerer
CROWN PITCH	190 mm		
STANCHION	32mm Aluminum Hard Anodize Black		32mm Steel CP Finish
CASTING	Magnesium		
DROPOUT	15x150mm QR Axle		
FEATURE	Hydraulic Rebound adjust, Remote Lock-out, Air Spring	Hydraulic Compression, Rebound adjust, Lock-out, Air Spring	Hydraulic Lock-Out
SYSTEM	OCR(R), Air(L)		Oil(R), Coil(L)
TRAVEL (mm)	26": 80, 100, 120 mm		
BRAKE TYPE	Disc Only		
WEIGHT (kgs) (w/ 200mm steerer)	2.22	2.20	3.00
Max Tire (w/o fender)	26"x4.0"		

26" 20" 32 mm E-BIKE READY

GUIDE 26/20

MODEL	AIR-TNL	AIR-MLC	TNL	MLC	T
STEERER	28.6mm Steel (Optional 1.5" Steel tapered steerer)				
CROWN PITCH	180 mm				
STANCHION	32mm Steel CP Finish				
CASTING	Aluminum				
DROPOUT	9x135mm Open Dropout				
FEATURE	Hydraulic Lock-Out Air Spring	Mechanical Lock-Out Air Spring	Hydraulic Lock-Out	Mechanical Lock-Ou	Preload Adjust
SYSTEM	Oil(R), Air(L)	Air	Oil(R), Coil(L)	Coil	
TRAVEL (mm)	26": 75, 95, 120 mm / 20": 45, 60 mm				
BRAKE TYPE	Disc Only				
WEIGHT (kgs) (w/ 200mm steerer)	26" : 3.52 20" : 3.27	26" : 3.37 20" : 3.12	26" : 3.62 20" : 3.37	26" : 3.47 20" : 3.22	26" : 3.32 20" : 3.07
Max Tire (w/o fender)	26"x4.6" or 20"4.6"				

PAVEMENT
STEM SHOCK

MODEL	W/O Lockout	W/ Lockout
Adjustable angle	+4°, 0°, -4°	
Travel	20 mm	
Features	Angle adjust spacer option for the stem	Angle adjust spacer option for the stem, Lockout
Diameter	fit into inner diameter ≥ 24.5mm steerer	
Length	Suspension system will add 35mm of height to the steer tube	
Weight	0.37	

RST CROSS COUNTRY

Lightweight and efficient suspension from 80mm to 120mm distinguish the XC and touring lineups. Forks with a perfectly balanced mixture of comfort, performance and trail control ready for enjoying your local trail network to competing in the toughest race events.

Rider *Jan Alwers*
Photo by *Jan Alwers*

29" 32 mm E-BIKE READY

REVEAL 29-15/9 mm

MODEL	AIR TRL	AIR
STEERER	28.6mm Aluminum (Optional 1.5" Aluminum tapered steerer)	
CROWN PITCH	130 mm	
STANCHION	32mm Aluminum Hard Anodize Black	
CASTING	Magnesium	
DROPOUT	15mm QR Axle / 9mm Open Dropout	
FEATURE	Hydraulic Rebound adjust, Remote Lock-out, Air Spring	Hydraulic Compression, Rebound adjust, Lock-out, Air Spring
SYSTEM	OCR+(R), Air(L)	
TRAVEL (mm)	29": 80, 100, 120 mm	
BRAKE TYPE	Disc Only	
WEIGHT (kgs) (w/ 200mm steerer)	15: 1.82 9: 1.78	15: 1.80 9: 1.75
Max Tire (w/o fender)	29"x2.6"	

27.5" 32 mm E-BIKE READY

REVEAL 27.5-15/9 mm

MODEL	AIR TRL	AIR
STEERER	28.6mm Aluminum (Optional 1.5" Aluminum tapered steerer)	
CROWN PITCH	130 mm	
STANCHION	32mm Aluminum Hard Anodize Black	
CASTING	Magnesium	
DROPOUT	15mm QR Axle / 9mm Open Dropout	
FEATURE	Hydraulic Rebound adjust, Remote Lock-out, Air Spring	Hydraulic Compression, Rebound adjust, Lock-out, Air Spring
SYSTEM	OCR+(R), Air(L)	
TRAVEL (mm)	27.5": 80, 100, 120 mm	
BRAKE TYPE	Disc Only	
WEIGHT (kgs) (w/ 200mm steerer)	15: 1.78 9: 1.73	15: 1.76 9: 1.71
Max Tire (w/o fender)	27.5"x2.6"	

29" 32 mm E-BIKE READY

F1RST 29-15/9 mm

MODEL	AIR TRL	AIR
STEERER	28.6mm Aluminum (Optional 1.5" Aluminum tapered steerer)	
CROWN PITCH	130 mm	
STANCHION	32mm Aluminum Hard Anodize Black	
CASTING	Magnesium	
DROPOUT	15mm QR Axle / 9mm Open Dropout	
FEATURE	Hydraulic Rebound adjust, Remote Lock-out, Air Spring	Hydraulic Compression, Rebound adjust, Lock-out, Air Spring
SYSTEM	BO-TNL(R), Air(L)	
TRAVEL (mm)	29": 80, 100, 120 mm	
BRAKE TYPE	Disc Only	
WEIGHT (kgs) (w/ 200mm steerer)	15: 2.15 9: 2.10	15: 2.13 9: 2.08
Max Tire (w/o fender)	29"x2.6"	

27.5" 32 mm E-BIKE READY

F1RST 27.5-15/9 mm

MODEL	AIR TRL	AIR
STEERER	28.6mm Aluminum (Optional 1.5" Aluminum tapered steerer)	
CROWN PITCH	130 mm	
STANCHION	32mm Aluminum Hard Anodize Black	
CASTING	Magnesium	
DROPOUT	15mm QR Axle / 9mm Open Dropout	
FEATURE	Hydraulic Rebound adjust, Remote Lock-out, Air Spring	Hydraulic Compression, Rebound adjust, Lock-out, Air Spring
SYSTEM	BO-TNL(R), Air(L)	
TRAVEL (mm)	27.5": 80, 100, 120 mm	
BRAKE TYPE	Disc Only	
WEIGHT (kgs) (w/ 200mm steerer)	15: 2.10 9: 2.05	15: 2.08 9: 2.03
Max Tire (w/o fender)	27.5"x2.6"	

29" 32 mm E-BIKE READY

AERIAL 29-15/9 mm

MODEL	RL-R	TNL-R	RL	TNL	MLC
STEERER	28.6mm Aluminum (Optional 1.5" Aluminum tapered steerer)				
CROWN PITCH	130 mm				
STANCHION	32mm Steel QPQ Black				
CASTING	Magnesium				
DROPOUT	15mm Bolt Axle / 9mm Open Dropout				
FEATURE	Hydraulic Rebound Adjust, Remote Lock-out, Air Spring	Hydraulic Rebound Adjust, Lock-out, Air Spring	Hydraulic Remote Lock-out, Air Spring	Hydraulic Lock-out, Air Spring	Mechanical Lock-out, Air Spring
SYSTEM	Oil(R), Air(L)				Air(L)
TRAVEL (mm)	29": 80, 100, 120 mm				
BRAKE TYPE	Disc Only				
WEIGHT (kgs) (w/ 200mm steerer)	15: 2.52 9: 2.47	15: 2.46 9: 2.41	15: 2.46 9: 2.41	15: 2.40 9: 2.35	15: 2.20 9: 2.15
Max Tire (w/o fender)	29"x2.6"				

27.5" 32 mm E-BIKE READY

AERIAL 27.5-15/9 mm

MODEL	RL-R	TNL-R	RL	TNL	MLC
STEERER	28.6mm Aluminum (Optional 1.5" Aluminum tapered steerer)				
CROWN PITCH	130 mm				
STANCHION	32mm Steel QPQ Black				
CASTING	Magnesium				
DROPOUT	15mm Bolt Axle / 9mm Open Dropout				
FEATURE	Hydraulic Rebound Adjust, Remote Lock-out, Air Spring"	Hydraulic Rebound Adjust, Lock-out, Air Spring	Hydraulic Remote Lock-out, Air Spring	Hydraulic Lock-out, Air Spring	Mechanical Lock-out, Air Spring"
SYSTEM	Oil(R), Air(L)				Air(L)
TRAVEL (mm)	27.5": 80, 100, 120 mm				
BRAKE TYPE	Disc Only				
WEIGHT (kgs) (w/ 200mm steerer)	15: 2.47 9: 2.42	15: 2.41 9: 2.36	15: 2.41 9: 2.36	15: 2.35 9: 2.30	15: 2.15 9: 2.10
Max Tire (w/o fender)	27.5"x2.6"				

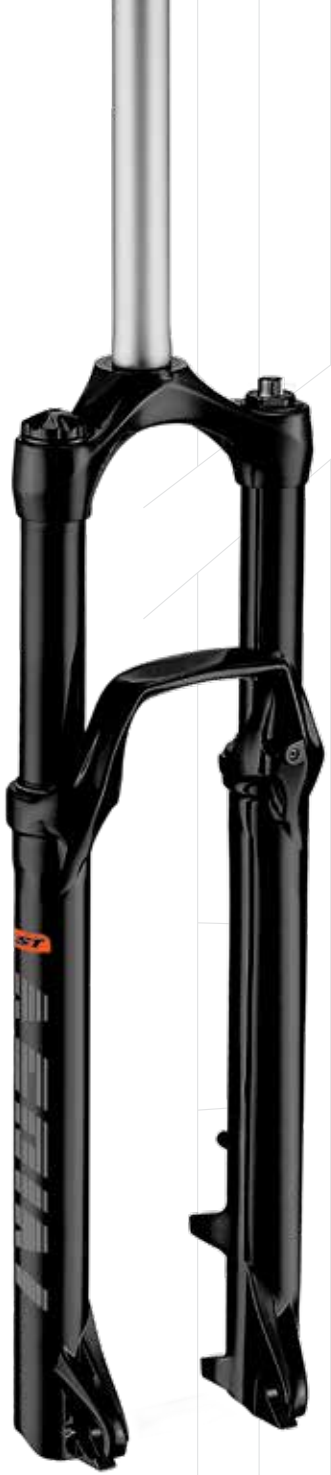

OMEGA 15 mm 29/27.5

MODEL	15 RA	15 RL	15 TNL	15 MLC	15 T
STEERER	28.6mm Steel (Optional 1.5" Steel tapered steerer)				
CROWN PITCH	130 mm				
STANCHION	32mm Steel CP Finish				
CASTING	Magnesium				
DROPOUT	15mm Bolt Axle				
FEATURE	Hydraulic Rebound adjust	Hydraulic Remote Lock-Out	Hydraulic Lock-Out	Mechanical Lock-Out	Preload Adjust
SYSTEM	Oil(R), Coil(L)			Coil	
TRAVEL (mm)	29"/27.5": 80, 100, 120 mm				
BRAKE TYPE	Disc Only				
WEIGHT (kgs) (w/ 200mm steerer)	29": 2.49 27.5": 2.32	29": 2.60 27.5": 2.41	29": 2.52 27.5": 2.35	29": 2.29 27.5": 2.12	29": 2.29 27.5": 2.12
Max Tire (w/o fender)	29" x 2.6" or 27.5" x 2.6"				

29" 27.5" 26" 32 mm E-BIKE READY

OMEGA 9 mm 29/27.5/26

MODEL	9 RA	9 RL	9 TNL	9 MLC	9 T
STEERER	28.6mm Steel (Optional 1.5" Steel tapered steerer)				
CROWN PITCH	130 mm				
STANCHION	32mm Steel CP Finish				
CASTING	Magnesium				
DROPOUT	9mm Open Dropout				
FEATURE	Hydraulic Rebound adjust	Hydraulic Remote Lock-Out	Hydraulic Lock-Out	Mechanical Lock-Out	Preload Adjust
SYSTEM	Oil(R), Coil(L)			Coil	
TRAVEL (mm)	29"/27.5"/26": 80, 100, 120 mm				
BRAKE TYPE	Disc Only (26" has Disc & V-brake version option)				
WEIGHT (kgs) (w/ 200mm steerer)	29": 2.44 27.5": 2.27 26": 2.5	29": 2.55 27.5": 2.36 26": 2.61	29": 2.47 27.5": 2.30 26": 2.53	29": 2.29 27.5": 2.07 26": 2.30	29": 2.29 27.5": 2.07 26": 2.30
Max Tire (w/o fender)	29" x 2.6" or 27.5" x 2.6" or 26" x 2.4"				

New 2023 ITEM

29" 30 mm E-BIKE READY

BLAZE 29 -15/9 mm

MODEL	RA	RL	TNL	MLC	T
STEERER	28.6mm Steel (Optional 1.5" Steel tapered steerer)				
CROWN PITCH	130 mm				
STANCHION	30mm Steel CP Finish				
CASTING	Aluminum				
DROPOUT	15mm Bolt Axle / 9mm Open Dropout				
FEATURE	Hydraulic Rebound adjust	Hydraulic Remote Lock-Out	Hydraulic Lock-Out	Mechanical Lock-Out	Preload Adjust
SYSTEM	Oil(R), Coil(L)			Coil	
TRAVEL (mm)	29": 80, 100, 120 mm				
BRAKE TYPE	Disc Only				
WEIGHT (kgs) (w/ 200mm steerer)	15: 2.86 9: 2.81	15: 2.95 9: 2.90	15: 2.89 9: 2.84	15: 2.66 9: 2.61	15: 2.66 9: 2.61
Max Tire (w/o fender)	29" x 2.6"				

EFBE TRI-TEST EPAC MTB-XC CATEGORY 3

27.5" 30 mm E-BIKE READY

BLAZE 27.5-15/9 mm

MODEL	RA	RL	TNL	MLC	T
STEERER	28.6mm Steel				
CROWN PITCH	130 mm				
STANCHION	30mm Steel CP Finish				
CASTING	Aluminum				
DROPOUT	15mm Bolt Axle / 9mm Open Dropout				
FEATURE	Hydraulic Rebound adjust	Hydraulic Remote Lock-Out	Hydraulic Lock-Out	Mechanical Lock-Out	Preload Adjust
SYSTEM	Oil(R), Coil(L)			Coil	
TRAVEL (mm)	27.5": 80, 100, 120 mm				
BRAKE TYPE	Disc Only				
WEIGHT (kgs) (w/ 200mm steerer)	15: 27.8 9: 2.73	15: 2.87 9: 2.82	15: 2.81 9: 2.76	15: 2.56 9: 2.51	15: 2.60 9: 2.55
Max Tire (w/o fender)	27.5" x 2.6"				

EFBE TRI-TEST EPAC MTB-XC 3

26" 30 mm

ALEX 26

MODEL	RL	TNL	MLC	T
STEERER	28.6mm Steel			
CROWN PITCH	125 mm			
STANCHION	30mm Steel CP Finish			
CASTING	Aluminum			
DROPOUT	9mm Open Dropout			
FEATURE	Hydraulic Remote Lock-Out	Hydraulic Lock-Out	Mechanical Lock-Out	Preload Adjust
SYSTEM	Oil(R), Coil(L)		Coil	
TRAVEL (mm)	26": 80, 100 mm			
BRAKE TYPE	Disc only			
WEIGHT (kgs) (w/ 200mm steerer)	2.82	2.76	2.51	2.55
Max Tire (w/o fender)	26"X2.2"			

26" 28.6 mm

ANGEL 26

MODEL	RL	TNL	MLC	T
STEERER	28.6mm Steel			
CROWN PITCH	112 mm			
STANCHION	28.6mm Steel CP Finish			
CASTING	Magnesium			
DROPOUT	9mm Open Dropout			
FEATURE	Hydraulic Remote Lock-Out	Hydraulic Lock-Out	Mechanical Lock-Out	Preload Adjust
SYSTEM	Oil(R), Coil(L)		Coil	
TRAVEL (mm)	26": 60, 75 mm			
BRAKE TYPE	Disc or Disc & V-brake			
WEIGHT (kgs) (w/ 200mm steerer)	2.22	2.16	2.11	2.05
Max Tire (w/o fender)	26"X2.2"			

29" 27.5" 26" 28.6 mm

GILA 29/27.5/26

MODEL	RL	TNL	MLC	T
STEERER	28.6mm Steel			
CROWN PITCH	29": 130 mm/ 27.5"&26": 125 mm			
STANCHION	28.6mm Steel CP Finish			
CASTING	Aluminum			
DROPOUT	9mm Open Dropout			
FEATURE	Hydraulic Remote Lock-Out	Hydraulic Lock-Out	Mechanical Lock-Out	Preload Adjust
SYSTEM	Oil(R), Coil(L)		Coil	
TRAVEL (mm)	29"/27.5"/26": 80, 100 mm (29" has 120mm version option)			
BRAKE TYPE	Disc Only (27.5"&26" has Disc & V-brake option)			
WEIGHT (kgs) (w/ 200mm steerer)	29": 2.70 27.5": 2.50 26": 2.41	29": 2.64 27.5": 2.44 26": 2.35	29": 2.41 27.5": 2.19 26": 2.10	29": 2.36 27.5": 2.14 26": 2.05
Max Tire (w/o fender)	29"x2.4" or 27.5"x2.4" or 26"x2.2"			

29" 27.5" 26" 25.4 mm

PAVEMENT

CAPA 29/27.5/26

MODEL	MLC	T
STEERER	28.6 mm Steel (26" has 25.4mm steel option)	
CROWN PITCH	29"&27.5": 125 mm/ 26": 120 mm	
STANCHION	25.4mm Steel CP Finish	
CASTING	Aluminum	
DROPOUT	9mm Open Dropout	
FEATURE	Mechanical Lock-Out	Preload Adjust
SYSTEM	Coil	
TRAVEL (mm)	29"&27.5": 60, 80 mm/ 26": 80 mm	
BRAKE TYPE	Disc or Disc & V-brake	
WEIGHT (kgs) (w/ 200mm steerer)	29": 2.07 27.5": 2.05 26": 2.03	29": 2.02 27.5": 2.00 26": 1.98
Max Tire (w/o fender)	29"x2.4" or 27.5"x2.4" or 26"x2.2"	

RST DIRT JUMP

The fork series for DIRT riders – Increased durability and ready for air time. Tough, short travel design combined with a top performing damping system make for forks ready to take on the toughest lines on the planet.

Rider *Fred Austruy*
Photo by *Jonathan Vael*

26" 36 mm

SPACE 26

MODEL	Jump	Free
STEERER	28.6mm Aluminum (optional 1.5" Aluminum tapered steerer)	28.6mm Cr-mo Steel
CROWN PITCH	138 mm	
STANCHION	36mm Aluminum Hard Anodize Black	36mm Steel QPQ black
CASTING	Magnesium	
DROPOUT	20mm Bolt Axle	
FEATURE	Hydraulic Rebound adjust, Air Spring	Hydraulic Rebound adjust
SYSTEM	Oil(R), Air(L)	Oil(R), Coil(L)
TRAVEL (mm)	26": 80, 100 mm	
BRAKE TYPE	Disc Only	
WEIGHT (kgs) (w/ 200mm steerer)	2.63	2.93
Max Tire (w/o fender)	26"X2.4"	

27.5" 26" 34 mm

SLOPE 27.5/26

MODEL	
STEERER	28.6mm Aluminum (Optional 1.5" Aluminum tapered steerer)
CROWN PITCH	130 mm
STANCHION	34mm Aluminum Hard Anodize Black
CASTING	Magnesium
DROPOUT	15mm QR Axle
FEATURE	Hydraulic Compression, Rebound adjust, Air Spring
SYSTEM	OCR+(R), Air(L)
TRAVEL (mm)	27.5" / 26": 80, 100, 130 mm
BRAKE TYPE	Disc Only
WEIGHT (kgs) (w/ 200mm steerer)	27.5": 2.00 26": 1.98
Max Tire (w/o fender)	27.5"x2.4" or 26"x2.4"

26" 32 mm

DIRT 26-15/9 mm

MODEL	R	RA	T	15 R	15 RA	15 T
STEERER	28.6mm Cr-mo steel					
CROWN PITCH	130 mm					
STANCHION	32mm Steel CP Finish					
CASTING	Aluminum					
DROPOUT	9mm Open Dropout			15mm Bolt Axle		
FEATURE	Hydraulic Rebound-fixed	Hydraulic Rebound adjust	Preload Adjust	Hydraulic Rebound-fixed	Hydraulic Rebound adjust	Preload Adjust
SYSTEM	Oil(R), Coil(L)		Coil	Oil(R), Coil(L)		Coil
TRAVEL (mm)	26": 80, 100, 130 mm					
BRAKE TYPE	Disc or Disc & V-brake					
WEIGHT (kgs) (w/ 200mm steerer)	3.01	3.01	3.05	3.06	3.06	3.11
Max Tire w/o fender)	26"x2.2"					

RST CROSS TREKKING

Comfortable forks for touring and city bikes with travel around 50mm. Efficient suspension forks that include mounting Options that allow use of integrated lights, fenders, dynamos and even roller brake use. Carefree technical systems allow convenient daily use.

Rider *Stephan Guddat*
Photo by *Jan Alwers*

29" 32 mm E-BIKE READY

AIR/COIL
PULSE 29-15 mm

MODEL	Air-RL	Air-TNL	RL	TNL
STEERER	1.5" Steel tapered steerer (Optional 1.5" Aluminum tapered steerer)			
CROWN PITCH	130 mm			
STANCHION	32mm Steel QPQ Black			
CASTING	Magnesium			
DROPOUT	15mm QR Axle			
FEATURE	Hydraulic Remote Lock-out, Air Spring	Hydraulic Lock-out, Air Spring	Hydraulic Remote Lock-out	Hydraulic Lock-out,
SYSTEM	Oil(R), Air(L)		Oil(R), Coil(L)	
TRAVEL (mm)	29": 50, 60, 80, 100 mm			
BRAKE TYPE	Disc only			
WEIGHT (kgs) (w/ 200mm steerer)	2.69	2.63	2.89	2.83
Max Tire (w/o fender)	29"x2.4"			

29" 30 mm E-BIKE READY

AIR/COIL
PULSE 29

MODEL	Air-RL	Air-TNL	RL	TNL
STEERER	28.6mm Steel (Optional 1.5" Steel tapered steerer)			
CROWN PITCH	130 mm			
STANCHION	30mm Steel QPQ Black			
CASTING	Aluminum			
DROPOUT	9mm Open Dropout			
FEATURE	Hydraulic Remote Lock-out, Air Spring	Hydraulic Lock-out, Air Spring	Hydraulic Remote Lock-out	Hydraulic Lock-out,
SYSTEM	Oil(R), Air(L)		Oil(R), Coil(L)	
TRAVEL (mm)	29": 50, 60 mm			
BRAKE TYPE	Disc only			
WEIGHT (kgs) (w/ 200mm steerer)	2.89	2.83	2.90	2.84
Max Tire (w/o fender)	29"x2.6"			

27.5" 30 mm E-BIKE READY

AIR/COIL
PULSE 27.5-15/9 mm

MODEL	Air-RL	Air-TNL	RL	TNL
STEERER	28.6mm Aluminum (Optional 1.5" Aluminum tapered steerer)			
CROWN PITCH	130 mm			
STANCHION	30mm Steel QPQ Black			
CASTING	Aluminum			
DROPOUT	15mm Bolt Axle 9mm Open Dropout			
FEATURE	Hydraulic Remote Lock-out, Air Spring	Hydraulic Lock-out, Air Spring	Hydraulic Remote Lock-out	Hydraulic Lock-out
SYSTEM	Oil(R), Air(L)		Oil(R), Coil(L)	
TRAVEL (mm)	27.5": 60, 80, 100 mm			
BRAKE TYPE	Disc only			
WEIGHT (kgs) (w/ 200mm steerer)	15: 2.66 9: 2.61	15: 2.60 9: 2.55	15: 2.76 9: 2.71	15: 2.70 9: 2.65
Max Tire (w/o fender)	27.5"x2.6"			

EFBE TRI-TEST EPAC TREKKING CATEGORY 2

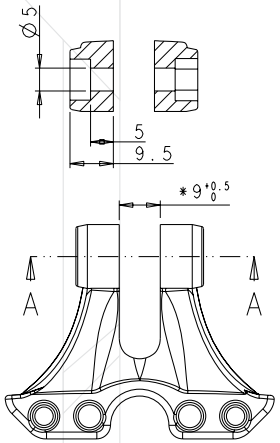

#M5GACC0921(M5*1.0)
#M5GACC0921 for
TRELOCK and BASTA FITMENT

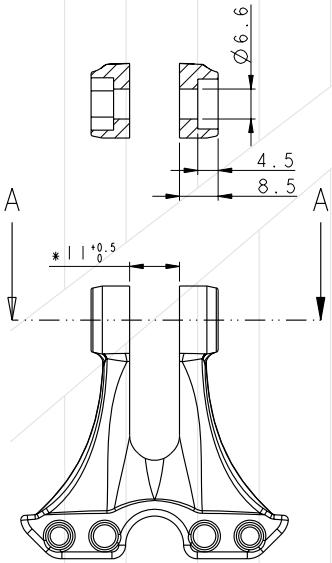

#M5GACX0109-01(M6*1.0)
#M5GACX0109-01
for BUMM FITMENT

PLS BRACKET

FRONT LIGHT MAKER	RST BRACKET PART	AVAILABLE MODEL
BUMM	M5GACX0109-01 (using M6 Screw)	All models
AXA	M5GACC0921 (using M5 Screw)	Ecoline Pico 15/30 Echo 15/30 Compactline 20/35 Blueline 30/50
TRELOCK	M5GACC0921 (using M5 Screw)	Bike-I Veo 20/50 Bike-I Retro Bike-I Go Bike-I Prio Bike-I Airflow 70/100

700C 30 mm E-BIKE READY

VOGUE E 15/9 mm

MODEL	9 Air TRL	9 Air	15 Air TRL	15 Air
STEERER	1.5" Aluminum tapered steerer			
CROWN PITCH	130 mm			
STANCHION	30mm Aluminum Hard Anodize Black			
CASTING	Aluminum			
DROPOUT	9mm Open Dropout		15mm Bolt Axle	
FEATURE	Hydraulic Rebound adjust, Remote Lock-out, Air Spring	Hydraulic Compression, Rebound adjust, Lock-out, Air Spring	Hydraulic Rebound adjust, Remote Lock-out, Air Spring	Hydraulic Compression, Rebound adjust, Lock-out, Air Spring
SYSTEM	OCR(R), Air(L)			
TRAVEL (mm)	700C: 50, 60, 80 mm			
BRAKE TYPE	Disc Only			
WEIGHT (kgs) (w/ 200mm steerer)	2.36	2.34	2.40	2.38
Max Tire (w/o fender)	700x50C			

700C 28.6 mm

VOGUE

MODEL	Air TRL	Air
STEERER	28.6mm Aluminum (Optional 1.5" Aluminum tapered steerer)	
CROWN PITCH	120 mm	
STANCHION	28.6mm Aluminum Hard Anodize Black	
CASTING	Magnesium	
DROPOUT	9mm Open Dropout	
FEATURE	Hydraulic Rebound adjust, Remote Lock-out, Air Spring	Hydraulic Compression, Rebound adjust, Lock-out, Air Spring
SYSTEM	OCR(R), Air(L)	
TRAVEL (mm)	700C: 50, 60, 80 mm	
BRAKE TYPE	Disc or Disc & V-brake	
WEIGHT (kgs) (w/ 200mm steerer)	1.80	1.78
Max Tire (w/o fender)	700X50C	

700C 30 mm E-BIKE READY

VIV AIR E 15/9 mm

MODEL	9 TRL	9 TNL	15 TRL	15 TNL
STEERER	28.6mm Steel (Optional 1.5" Aluminum tapered steerer)			
CROWN PITCH	130 mm			
STANCHION	30mm Steel QPQ black			
CASTING	Aluminum			
DROPOUT	9mm Open Dropout		15mm Bolt Axle	
FEATURE	Hydraulic Remote Lock-out, Air Spring	Hydraulic Lock-out, Air Spring	Hydraulic Remote Lock-out, Air Spring	Hydraulic Lock-out, Air Spring
SYSTEM	Oil(R), Air(L)			
TRAVEL (mm)	700C: 50, 60, 80 mm			
BRAKE TYPE	Disc Only			
WEIGHT (kgs) (w/ 200mm steerer)	2.80	2.74	2.84	2.78
Max Tire (w/o fender)	700x50C			

700C 28.6 mm E-BIKE READY

VIV AIR

MODEL	RL	TNL
STEERER	28.6mm Aluminum (Optional 1.5" Aluminum tapered steerer)	
CROWN PITCH	120 mm	
STANCHION	28.6mm Steel QPQ black	
CASTING	Magnesium	
DROPOUT	9mm Open Dropout	
FEATURE	Hydraulic Remote Lock-out, Air Spring	Hydraulic Lock-out, Air Spring
SYSTEM	Oil(R), Air(L)	
TRAVEL (mm)	700C: 50, 60, 80 mm	
BRAKE TYPE	Disc or Disc & V-brake	
WEIGHT (kgs) (w/ 200mm steerer)	2.23	2.17
Max Tire (w/o fender)	700X50C	

700C 30 mm E-BIKE READY

VOLANT 15/9 mm

MODEL	RL	TNL	MLC	T
STEERER	28.6mm Steel (Optional 1.5" Steel tapered steerer or 1.5" Aluminum tapered steerer)			
CROWN PITCH	130 mm			
STANCHION	30mm Steel CP Finish			
CASTING	Aluminum			
DROPOUT	15mm Bolt Axle 9mm Open Dropout			
FEATURE	Hydraulic Remote Lock-Out	Hydraulic Lock-Out	Mechanical Lock-Out	Preload Adjust
SYSTEM	Oil(R), Coil(L)		Coil	
TRAVEL (mm)	700C: 50, 60, 80 mm			
BRAKE TYPE	Disc Only			
WEIGHT (kgs) (w/ 200mm steerer)	15: 2.85 9: 2.84	15: 2.79 9: 2.78	15: 2.56 9: 2.55	15: 2.56 9: 2.55
Max Tire (w/o fender)	700x50C			

EFBE TRI-TEST EPIC TREKKING CATEGORY 2

27.5" 30 mm E-BIKE READY

AVALON 27.5-15/9 mm

MODEL	RL	TNL	MLC	T
STEERER	28.6mm Steel (Optional 1.5" Steel tapered steerer)			
CROWN PITCH	130 mm			
STANCHION	30mm Steel CP Finish			
CASTING	Aluminum			
DROPOUT	15mm Bolt Axle 9mm Open Dropout			
FEATURE	Hydraulic Remote Lock-Out	Hydraulic Lock-Out	Mechanical Lock-Out	Preload Adjust
SYSTEM	Oil(R), Coil(L)		Coil	
TRAVEL (mm)	27.5": 50, 60, 80 mm			
BRAKE TYPE	Disc only			
WEIGHT (kgs) (w/ 200mm steerer)	15: 3.01 9: 2.96	15: 2.94 9: 2.89	15: 2.71 9: 2.66	15: 2.71 9: 2.66
Max Tire (w/o fender)	26"x2.4" or 27.5"x2.2"			

EFBE TRI-TEST EPIC TREKKING CATEGORY 2

700C 28.6 mm E-BIKE READY

NOVA

MODEL	RL	TNL	MLC	T
STEERER	28.6mm Steel (Optional 1.5" Steel tapered steerer)			
CROWN PITCH	112 mm			
STANCHION	28.6mm Steel CP Finish			
CASTING	Aluminum			
DROPOUT	9mm Open Dropout			
FEATURE	Hydraulic Remote Lock-Out	Hydraulic Lock-Out	Mechanical Lock-Out	Preload Adjust
SYSTEM	Oil (R), Coil (L)		Coil	
TRAVEL (mm)	700C: 50, 60 mm			
BRAKE TYPE	Disc or Disc & V-brake			
WEIGHT (kgs) (w/ 200mm steerer)	2.57	2.51	2.30	2.31
Max Tire (w/o fender)	700x50C			

700C 28.6 mm

VERSE

MODEL	RL	TNL	MLC	T
STEERER	28.6 / 25.4mm Steel			
CROWN PITCH	112 mm			
STANCHION	28.6mm Steel CP Finish			
CASTING	Aluminum			
DROPOUT	9mm Open Dropout			
FEATURE	Hydraulic Remote Lock-Out	Hydraulic Lock-Out	Mechanical Lock-Out	Preload Adjust
SYSTEM	Oil(R), Coil(L)		Coil	
TRAVEL (mm)	700C: 40, 50 mm			
BRAKE TYPE	V-brake only			
WEIGHT (kgs) (w/ 200mm steerer)	2.57	2.51	2.30	2.31
Max Tire (w/o fender)	700x50C			

700C 28.6 mm E-BIKE READY

VITA

MODEL	RL	TNL	MLC	T
STEERER	28.6mm Steel (Optional 1.5" Steel tapered steerer)			
CROWN PITCH	120 mm			
STANCHION	28.6mm Steel CP Finish			
CASTING	Magnesium			
DROPOUT	9mm Open Dropout			
FEATURE	Hydraulic Remote Lock-Out	Hydraulic Lock-Out	Mechanical Lock-Out	Preload Adjust
SYSTEM	Oil(R), Coil(L)		Coil	
TRAVEL (mm)	700C: 50, 60, 80 mm			
BRAKE TYPE	Disc or Disc & V-brake			
WEIGHT (kgs) (w/ 200mm steerer)	2.41	2.35	2.13	2.13
Max Tire (w/o fender)	700x50C			

EFBE TRI-TEST EPIC TREKKING CATEGORY 2

700C 28.6 mm E-BIKE READY

NEON PLS

MODEL	RL	TNL	MLC	T
STEERER	28.6mm Steel (Optional 1.5" Steel tapered steerer)			
CROWN PITCH	112 mm			
STANCHION	28.6mm Steel CP Finish			
CASTING	Aluminum			
DROPOUT	9mm Open Dropout			
FEATURE	Hydraulic Remote Lock-Out	Hydraulic Lock-Out	Mechanical Lock-Out	Preload Adjust
SYSTEM	Oil(R), Coil(L)		Coil	
TRAVEL (mm)	700C: 50, 60 mm			
BRAKE TYPE	Disc or Disc & V-brake			
WEIGHT (kgs) (w/ 200mm steerer)	2.57	2.51	2.30	2.31
Max Tire (w/o fender)	700x50C			

700C 25.4 mm

NEON

MODEL	RL	TNL	MLC	T
STEERER	28.6 / 25.4mm Steel			
CROWN PITCH	112 mm			
STANCHION	25.4mm Steel CP Finish			
CASTING	Aluminum			
DROPOUT	9mm Open Dropout			
FEATURE	Hydraulic Remote Lock-Out	Hydraulic Lock-Out	Mechanical Lock-Out	Preload Adjust
SYSTEM	Oil(R), Coil(L)		Coil	
TRAVEL (mm)	700C: 50, 60 mm			
BRAKE TYPE	Disc or Disc & V-brake			
WEIGHT (kgs) (w/ 200mm steerer)	2.17	2.11	1.95	1.94
Max Tire (w/o fender)	700x50C			

700C 25.4 mm

URBAN

MODEL	RL	TNL	MLC	T
STEERER	28.6 / 25.4mm Steel			
CROWN PITCH	112 mm			
STANCHION	25.4mm Steel CP Finish			
CASTING	Aluminum			
DROPOUT	9mm Open Dropout			
FEATURE	Remote Hydraulic Lock-Out	Hydraulic Lock-Out	Mechanical Lock-Out	Preload Adjust
SYSTEM	Oil(R), Coil(L)		Coil	
TRAVEL (mm)	700C: 40 mm			
BRAKE TYPE	Roller& Disc brake only, No V-brake available			
WEIGHT (kgs) (w/ 200mm steerer)	2.13	2.07	1.86	1.87
Max Tire (w/o fender)	700x50C			

700C E-BIKE READY

SS A8

MODEL	SS A8
STEERER	28.6 mm Aluminum (Optional 1.5" Aluminum tapered steerer) (Min. Length: 210mm)
CASTING	Aluminum
DROPOUT	9mm Open Dropout
FEATURE	Alu. Blade Changeable Spring
TRAVEL (mm)	35 mm
BRAKE TYPE	Disc or Disc + V-brake(Optional Roller Mount)
WEIGHT (kgs) (w/ 200mm steerer)	1.70
Max Tire (w/o fender)	700x50C

700C E-BIKE READY

SS A7

MODEL	SS A7-T	SS A7
STEERER	28.6 mm Aluminum (Optional 1.5" Aluminum tapered steerer) (Min. Length: 210mm for T version & 210mm for w/o T version)	
CASTING	Aluminum	
DROPOUT	9mm Open Dropout	
FEATURES	Alu. Blade Spring Preload	Alu. Blade
TRAVEL (mm)	30 mm	35 mm
BRAKE TYPE	Disc or Disc + V-brake(Optional Roller Mount)	
WEIGHT (kgs) (w/ 200mm steerer)	1.70	
Max Tire (w/o fender)	700x50C	

20"

SS A2

MODEL	SS-A2-100
STEERER	28.6 mm Aluminum (Min. Length: 210mm)
CASTING	Aluminum
DROPOUT	9mm Open Dropout
FEATURES	Alu. Blade (Straight)
TRAVEL (mm)	30 mm
BRAKE TYPE	Disc + V-brake
WEIGHT (kgs) (w/ 200mm steerer)	1.32
Max Tire (w/o fender)	20"x1.5"

700C E-BIKE READY

PILOT

MODEL	PILOT
STEERER	1.5" Aluminum tapered steerer
CASTING	Aluminum
DROPOUT	9mm Open Dropout
FEATURE	ALU. BLADE
TRAVEL (mm)	40 mm
BRAKE TYPE	Roller & Disc Brake Only
WEIGHT (kgs) (w/ 200mm steerer)	2.10
Max Tire (w/o fender)	700X47C

RST
AM PACKAGE

AIR CARTRIDGE UPGRADE KIT

The perfect upgrade for your coil spring fork!
It covers the widest possible range of riders weight and allows for custom tuning to the riders preference. In addition, it shaves some weight compared to a standard coil spring.
Combine easy adjustability with the weight savings and this upgrade is a must have.

Fitments Available For

MODEL		
32mm Stanchion Forks	#H5GDPCDC2012-2	OMEGA 29 / 27.5, AERIAL 29 / 27.5
32mm Stanchion Forks	#H5GDPCDC2012-1	AERIAL 26
30mm Stanchion Forks	#H5GDPCDC2012-3	ALL BLAZE series

GREASE

Keep your suspension performing at its peak. Genuine RST grease was developed to withstand the most severe conditions. A perfectly balanced, lithium free suspension lubricant to retain that factory fresh performance of your RST fork. To be used for all suggested maintenance intervals.

Fitments Available For

MODEL		
Lubrication Kit 50g	#H5GACB182	ALL RST FORK
Lubrication Kit 5g	#H5FA1-2990-000	STEM SHOCK

HIGH PRESSURE AIR PUMP

RST's on inflation pump for suspension forks and rear shocks.
A must have for shops, mechanics, and basically all RST Air fork riders.
Dial in the perfect tune on your ride.

Fitments Available For

MODEL		
Air-Pump	#H5PFGP-2200-300	ALL RST Air forks

RST SPECIAL WRENCH

You have to have the right tools to do the job. Genuine RST preload adjusters have a unique shape that makes them stronger and you need the right tool to remove them for sporing changes and fork services. One tool conveniently fits all forks past, present and future.

Fitments Available For

MODEL		
RST wrench For preload adjusters	#H5GAC616	All models with preload adjust & mechnical lockout function

SPRING SEALS

Only use genuine RST seals to keep your fork performing at its peak.
Spring energized lip-seals keep the dust out and the grease in.

The dust seals need to be replaced when worn.

Fitments Available For

MODEL		
Seal for 32mm	#H5GBH8CEC1	AERIAL 110-15, ALPHA 110-15
Seal for 32mm	#H5GBHBAEC1	AERIAL 26/27.5/29/110-9, ALPHA 110-9, OMEGA 29/27.5, DIRT, PULSE 29-15
Seal for 30mm	#H5GBHCCCC1-2	F1RST 24-15, SPEX
Seal for 30mm	#H5GBH8CDC2	OMEGA 26, BLAZE 27.5/29, PULSE 27.5/29, VOLANT
Seal for 28.6mm	#H5GBH8CCC1	F1RST 24, AERIAL 24
Seal for 28.6mm	#H5GBHHCCC023	GILA 26/27.5/29, VOGUE, VIV AIR, VITA, NOVA, VERSE
Seal for 25.4 mm	#H5GBHCBC2	CAPA, NEON, URBAN

ADJUSTER (preload)

Genuine RST preload adjusters for replacement when something goes wrong.
A wide range of adjustment, combined with high reliability, distinguish these adjusters.

Fitments Available For

MODEL		
Adjuster for 32mm	#H5GAEAB29-1	DIRT
Adjuster for 32mm	#H5GAE0A29-1	OMEGA 29/27.5, ALPHA series
Adjuster for 30mm	#H5GAE0A30-1	OMEGA 26
Adjuster for 30mm	#H5FVP-2162-100-1	BLAZE series, VOLANT
Adjuster for 28.6mm	#H5FNM-2163-300-1	GILA 29/27.5
Adjuster for 28.6mm	#H5FNM-2163-100-1	GILA 26, VITA, NOVA, VERSE
Adjuster for 25.4mm	#H5FNA-2162-100-1	CAPA, NEON, URBAN

RST FORK SEAL KITS

Only use genuine RST seals to keep your fork performing at its peak.
Seals keep the dust out and the grease in. Sponge with oil can make fork compression smoothly.
SAG ring can help to measure SAG value easily.
The seal kits need to be replaced when worn.

Fitments Available For

MODEL		
Seal kits for 38mm	#H5GBHJCJC01-KT	KILLAH 29, STITCH 29
Seal kits for 36mm	#H5FXY-2611-000-KT	KILLAH 27.5/26, STITCH 27.5/26, STORM, SPACE
Seal kits for 34mm	#H5GBHECKC1-KT	ROGUE, TITAN, SLOPE
Seal kits for 32mm	#H5GBH8CEC1-KT	REVEAL, SNYPER, RENEGADE, F1RST 26/27.5/29/110 series

CAPS

Fitments Available For

MODEL		
Cap for 32mm	#H5GAEDMG29	OMEGA 29 T / 27.5 T, ALPHA T
Cap for 30mm	#H5GAEDMG275	OMEGA 26 T, VOLANT T,ALL BLAZE T series
Cap for 28.6mm	#H5GAE8MG030	GILA 26 T, VITA T, NOVA T, VERSE T
Cap for 25.4mm	#H5FH2-2340-000	CAPA T, NEON T, URBAN T

SMART REMOTE LOCK-OUT(SRL) UPGRADE KIT

The SRL Upgrade moves your fork's compression adjustment and lock-out control to a more convenient location, on to your handlebar!
The SRL Upgrade still allows the selection of different compression settings but also a locked-out setting at your finger tips while you ride.
The SRL Upgrade Kit can be mounted on most forks with a crown mounted lock-out control.

Fitments Available For

MODEL		
SRL Upgrade Kit	H5GDPBARL2011	ALL RST fork

O-RING KIT

Only use RST genuine o-rings to for the maintenance to keep the forks performing at its peak.
Special rubber compounds keep the fork being smooth.
The O-Rings need to be replaced when worn. Please refer to the RST owners manual.

Fitments Available For

MODEL	
O-ring kit for 34mm	H5GORHGMC0-AM
O-ring kit for 32mm	H5GORHGEC0-AM

DIMENSIONS

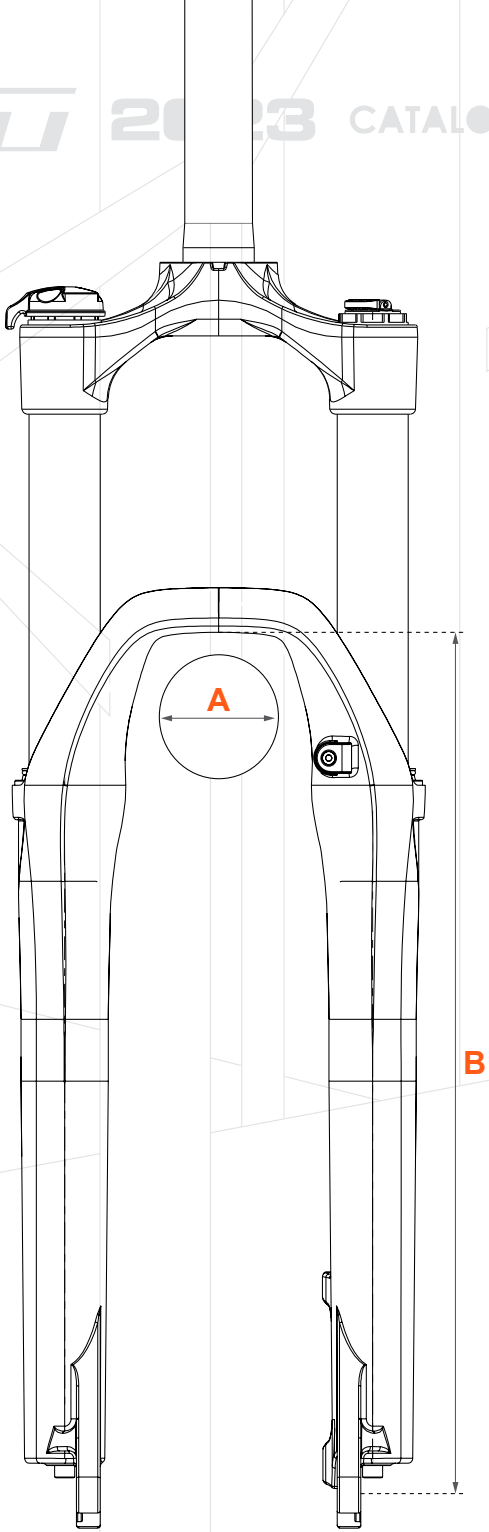

MODEL NAME	WIDTH A	HEIGHT B	MAXIMUM ROTOR SIZE	FENDER MOUNT
KILLAH 29	<67	385	203	-
KILLAH 27.5&26	<63	365	203	-
STITCH 29	<67	385	203	-
STITCH 27.5&26	<63	365	203	-
STORM 27.5&26	<63	365	203	-
REBEL 29 / 27.5+	<76 for 27.5"+ ; <63 for 29"	-	203	-
ROGUE 27.5&26	<63	365	203	-
TITAN 27.5& 26	<63	365	203	-
VIBE 27.5	<63	365	203	-
RENEGADE 26	<102	390	203	Yes
GUIDE 26	<117	410	203	Yes
GUIDE 20	<117	330	203	Yes
ROGUE 110-15	<76 for 27.5"+ ; <63 for 29"	380	203	Yes
TITAN 110-15	<76 for 27.5"+ ; <63 for 29"	380	203	Yes
VIBE 110-15	<76 for 27.5"+ ; <63 for 29"	380	203	Yes
BLADE 110-15	<73 for 27.5"+ ; <67 for 29"	392	203	Yes
FIRST 110-15 29 / 27.5+	<73 for 27.5"+ ; <67 for 29"	390	180	Yes
FIRST 110-9 29 / 27.5+	<73 for 27.5"+ ; <63 for 29"	378	180	Yes
FIRST 110-9 27.5 / 26	<67 for 27.5" ; <76 for 26"	365	180	Yes
AERIAL 110-15 29 / 27.5+	<73 for 27.5"+ ; <67 for 29"	390	180	Yes
AERIAL 110-9 29 / 27.5+	<73 for 27.5"+ ; <63 for 29"	378	180	Yes
AERIAL 110-9 27.5 / 26	<67 for 27.5" ; <76 for 26"	365	180	Yes
ALPHA 110-15 29 / 27.5+	<73 for 27.5"+ ; <67 for 29"	390	180	Yes
ALPHA 110-9 29 / 27.5+	<73 for 27.5"+ ; <63 for 29"	378	180	Yes
ALPHA 110-9 27.5 / 26	<67 for 27.5" ; <76 for 26"	365	180	Yes
SPACE 26	<63	365	203	-
SLOPE 27.5&26	<63	365	203	-

DIMENSIONS

MODEL NAME	WIDTH A	HEIGHT B	MAXIMUM ROTOR SIZE	FENDER MOUNT
DIRT 26	<56	350	180	-
REVEAL 29&29-15	<67	385	180	Yes
REVEAL 27.5&27.5-15	<67	376	180	Yes
F1RST 29&29-15	<67	385	180	Yes
F1RST 27.5&27.5-15	<67	376	180	Yes
F1RST 26 & 26-15	<67	350	180	Yes
AERIAL 29&29-15	<67	385	180	Yes
AERIAL 27.5&27.5-15	<67	376	180	Yes
AERIAL 26	<63	350	180	Yes
OMEAG 29&29-15	<67	385	180	Yes
OMEGA 27.5&27.5-15	<67	376	180	Yes
OMEGA 26	<63	350	180	Yes
BLAZE 29 & 29-15	<67	390	180	Yes
BLAZE 27.5&27.5-15	<63	370	180	Yes
ALEX 26	<56	351	180	-
GILA 29	<63	380	180	Yes
GILA 27.5	<63	365	180	Yes
GILA 26	<58	350	180	Yes
ANGEL 26	<56	355	160	-
CAPA 29	<63	380	180	Yes
CAPA 27.5	<63	365	180	Yes
CAPA 26	<56	352	160	Yes
SNYPER 24	<56	317	180	Yes
F1RST 24-15	<67	350	180	Yes
F1RST 24	<67	350	180	Yes
IGNITE 24	<56	317	180	Yes

MODEL NAME	WIDTH A	HEIGHT B	MAXIMUM ROTOR SIZE	FENDER MOUNT
AERIAL 24	<67	350	180	Yes
SPEX 20	<63	290	180	Yes
SPARK 20	<63	290	180	Yes
CAPA 24	<56	322	160	Yes
CAPA 20	<56	289	160	Yes
BEAST 24	<71	327	203	Yes
PORTER 20	<63	290	180	Yes
GARY 20	<67	289	160	Yes
PULSE 29-15	<63	380	180	Yes
PULSE 29	<67	390	180	Yes
PULSE 27.5&27.5-15	<63	376	180	Yes
VOGUE E	<55	381	180	Yes
VIVAir E	<55	381	180	Yes
VOGUE	<55	382	180	Yes
VIVAir	<55	382	180	Yes
VITA	<55	382	180	Yes
VOLANT	<55	381	180	Yes
AVALON 26	<63	360	180	Yes
NEON PLS	<55	381	180	Yes
NOVA	<55	381	180	Yes
VERSE	<55	377	160	Yes
NEON	<55	382	180	Yes
URBAN	<50	377	160	Yes
SS-A8	<55	382	180	Yes
SS-A7	<55	382	180	Yes
SS-A2-100	<32	265	160	Yes

Bike Category	DOWN HILL				FREE RIDE					ALL MOUNTAIN		
Model	KILLAH				STITCH				STORM	REBEL V2		
	29 COIL	29 AIR	27.5 / 26 COIL	27.5 / 26 AIR	29 AIR	29 COIL	27.5 / 26 AIR	27.5 / 26 COIL	26/27.5	Air	Air-TRL	Air w/o Lockout
Steerer	28.6mm Aluminum				1.5" Aluminum tapered steerer		28.6mm Aluminum (Optional 1.5" Aluminum tapered steerer)		28.6mm Cr-mo steel (Optional 1.5" Aluminum tapered steerer)	1.5" Aluminum tapered steerer		
Crown	145mm-Dual		138mm-Dual		145mm		138mm		138mm	140mm		
Stanchion	38mm Aluminum		36mm Aluminum		38mm Aluminum		36mm Aluminum		36mm steel	32mm Aluminum		
	Hard Anodize Black				Hard Anodize Black				QPQ black	Hard Anodize Black		
Lower	Magnesium				Magnesium				Magnesium	Magnesium		
	20x110 mm boost Bolt Axle		20mm Bolt Axle		15x110 mm Bolt Axle (Optional 20x110 mm boost)		20mm QR Axle		20mm QR Axle	15x110 mm Bolt Axle (Optional 20x110 mm boost)		
Feature	Hydraulic Compression and Rebound adjust	Hydraulic compression and Rebound adjust, Air spring	Hydraulic Compression and Rebound adjust	Hydraulic compression and Rebound adjust, Air spring	Hydraulic compression and Rebound adjust, Air spring	Hydraulic compression and Rebound adjust	Hydraulic compression and Rebound adjust, Air spring	Hydraulic compression and Rebound adjust	Hydraulic Rebound-adjust	Hydraulic compression and Rebound adjust, Lock-out, Air Spring	Hydraulic Rebound-adjust, Remote Lock-out, Air spring	Hydraulic compression and Rebound adjust, Air spring
Damper	OCR+				OCR+				Hydraulic Cartridge	OCR+		
Spring	Coil	Air	Coil	Air	Air	Coil	Air	Coil	Coil	Air		
Travel	200mm				160, 170, 180 mm				160, 170, 180 mm	80, 100, 130, 140, 150 mm		
Fork offset (mm)	51mm		43mm		51mm		43mm		43mm	43mm		
Fork height (mm)	29": 610		27.5": 580 26": 565		29":605		27.5": 555 / 565 / 575 26": 540 / 550 / 560		27.5": 555 / 565 / 575 26": 540 / 550 / 560	29"/27.5"+ : 490 / 510 / 540 / 550 / 560		
Brake Type	Disc only				Disc only				Disc only	Disc only		
Disc Brake Mount	Post				Post				Post	Post		
Recommended Max.& Min. Rotor Size in mm	Max:203 / Min:180				Max:203 / Min:180				Max:203 / Min:180	Max:203 / Min:180		
PLS Bracket Mount	-		-		-		-		-	-		
Weight (kgs) (w/steerer at 200mm)	29":3.25	29":3.05	27.5": 3.22 26": 3.20	27.5": 3.02 26": 3.00	29":2.68	29":2.88	27.5": 2.28 26": 2.26	27.5": 2.57 26": 2.55	27.5": 3.34 26": 3.32	29" :2.35	29" :2.33	29" :2.33
Max Tire (w/o fender)	29"x2.6"		27.5"x2.4" or 26"x2.4"		29"x2.6"		27.5"x2.4" or 26"x2.4"		27.5"x2.4" or 26"x2.4"	27.5"x3.0" or 29"x2.4"		
Origin of Production	Taiwan				Taiwan				Taiwan	Taiwan		

PRODUCT SPEC

ALL MOUNTAIN											
ROGUE 26/27.5			TITAN 26/27.5			VIBE 27.5					
Air w/o Lockout	Air-TRL	Air	Air w/o Lockout	Air-TRL	Air	AIR-RA	AIR-RL	AIR-TNL	RA	RL	TNL
28.6mm Aluminum (Optional 1.5" Aluminum tapered steerer)			28.6mm Aluminum (Optional 1.5" Aluminum tapered steerer)			1.5" Steel tapered steerer					
130mm			130mm			130mm					
34mm Aluminum			34mm Aluminum			34mm Steel					
Hard Anodize Black			Hard Anodize Black			QPQ black					
Magnesium			Magnesium			Magnesium					
15mm QR Axle			15mm QR Axle			15mm Bolt Axle					
Hydraulic compression and Rebound adjust, Air spring	Hydraulic Rebound-adjust, Remote Lock-out, Air spring	Hydraulic compression and Rebound adjust, Lock-out, Air spring	Hydraulic compression and Rebound adjust, Air spring	Hydraulic Rebound-adjust, Remote Lock-out, Air spring	Hydraulic compression and Rebound adjust, Lock-out, Air spring	Hydraulic Rebound-adjust, Air spring	Hydraulic Remote Lock-Out, Air spring	Hydraulic Lock-Out, Air spring	Hydraulic Rebound-adjust	Hydraulic Remote Lock-Out	Hydraulic Lock-Out
OCR+			OCR			Hydraulic Cartridge					
Air			Air			Air			Coil		
140, 150, 160 mm			140, 150 mm			130, 140 mm					
43mm			43mm			43mm					
27.5": 535 / 545 / 555 26": 530 / 540 / 550			27.5": 535 / 545 26": 530 / 540			525 / 535					
Disc only			Disc only			Disc only					
Post			Post			Post					
Max:203 / Min:180			Max:203 / Min:180			Max:203 / Min:180					
-			-			-					
27.5":2.00 26":1.98	27.5":2.02 26":2.00	27.5":2.00 26":1.98	27.5":2.29 26":2.27	27.5":2.31 26":2.29	27.5":2.29 26":2.27	2.88	2.97	2.91	3.14	3.23	3.17
27.5"x2.4" or 26"x2.4"			27.5"x2.4" or 26"x2.4"			27.5"x2.4"					
Taiwan			Taiwan			China					

Bike Category	FAT BIKE													110 PLUS		
Model	GUIDE										RENEGADE			ROGUE 110-15		
	26 AIR-TNL	26 AIR-MLC	26 TNL	26 MLC	26 T	20 AIR-TNL	20 AIR-MLC	20 TNL	20 MLC	20 T	Air-TRL	Air	TNL	Air w/o Lockout	Air-TRL	Air
Steerer	28.6mm Steel (Optional 1.5" Steel tapered steerer)					28.6mm Steel (Optional 1.5" Steel tapered steerer)					28.6mm Aluminum (Optional 1.5" Aluminum tapered steerer)		1.5" Steel Tapered steerer	1.5" Aluminum tapered steerer		
Crown	180mm					180mm					190mm			150mm		
Stanchion	32mm Steel					32mm Steel					32mm Aluminum		32mm Steel	34mm Aluminum		
	CP Finish					CP Finish					Hard Anodize Black		CP Finish	Hard Anodize Black		
Lower	Aluminum					Aluminum					Magnesium			Magnesium		
	9x135mm open dropout					9x135mm open dropout					15x150mm QR Axle			15x110mm QR Axle		
Feature	Hydraulic Lock-Out Air Spring	Mechanical Lock-Out Air Spring	Hydraulic Lock-Out	Mechanical Lock-Out	Preload Adjust	Hydraulic Lock-Out Air Spring	Mechanical Lock-Out Air Spring	Hydraulic Lock-Out	Mechanical Lock-Out	Preload Adjust	Hydraulic Rebound-adjust, Remote Lock-out, Air spring	Hydraulic compression and Rebound adjust, Lock-out, Air spring	Hydraulic Lock-Out	Hydraulic compression and Rebound adjust, Air spring	Hydraulic Rebound-adjust, Remote Lock-out, Air spring	Hydraulic compression and Rebound adjust,Lock-out, Air spring
Damper	Hydraulic Cartridge	-	Hydraulic Cartridge	-		Hydraulic Cartridge	-	Hydraulic Cartridge	-		OCR		Hydraulic Cartridge	OCR+		
Spring	Air		Coil			Air		Coil			Air		Coil	Air		
Travel	75, 95, 120 mm					45, 60 mm					80, 100, 120 mm			120, 130, 140, 150, 160 mm		
Fork offset (mm)	50mm					50mm					51mm			51mm		
Fork height (mm)	515 / 535 / 560					410 / 425					500 / 520 / 540			530 / 540 / 550 / 560 / 570		
Brake Type	Disc only					Disc only					Disc only			Disc only		
Disc Brake Mount	Post					Post					Post			Post		
Recommended Max.& Min. Rotor Size in mm	Max:203 / Min:160					Max:203 / Min:160					Max:203 / Min:160			Max:203 / Min:180		
PLS Bracket Mount	-					-					-			-		
Weight (kgs) (w/steerer at 200mm)	3.52	3.37	3.62	3.47	3.32	3.27	3.12	3.37	3.22	3.07	2.22	2.20	3.00	2.33	2.35	2.33
Max Tire (w/o fender)	26"x4.6					20"x4.6					26"x4.0"			27.5"x3.0" or 29"x2.25"		
Origin of Production	China										Taiwan			Taiwan		

PRODUCT SPEC

110 PLUS														
TITAN 110-15			VIBE 110-15						BLADE 110-15 29 / 27.5				F1RST 110-15 29 / 27.5+	
Air w/o Lockout	Air-TRL	Air	AIR-RA	AIR-RL	AIR-TNL	RA	RL	TNL	RL-R	TNL-R	AIR-RL-R	AIR-TNL-R	Air-TRL	Air
1.5" Aluminum tapered steerer			1.5" Steel tapered steerer						1.5" Steel tapered steerer				28.6mm Aluminum (Optional 1.5" Aluminum tapered steerer)	
150mm			150mm						140mm				140mm	
34mm Aluminum			34mm Steel						34mm Steel				32mm Aluminum	
Hard Anodize Black			QPQ black						QPQ black				Hard Anodize Black	
Magnesium			Magnesium						Aluminum				Magnesium	
15x110mm QR Axle			15x110 mm Bolt Axle						15x110 mm Bolt Axle				15x110mm Bolt Axle	
Hydraulic compression and Rebound adjust, Air spring	Hydraulic Rebound-adjust, Remote Lock-out, Air spring	Hydraulic compression and Rebound adjust, Lock-out, Air spring	Hydraulic Rebound-adjust, Air spring	Hydraulic Remote Lock-Out, Air spring	Hydraulic Lock-Out, Air spring	Hydraulic Rebound-adjust	Hydraulic Remote Lock-Out	Hydraulic Lock-Out	Hydraulic Remote Lock-Out, Rebound Adjust	Hydraulic Lock-Out, Rebound Adjust	Hydraulic Remote Lock-Out, Air spring, Rebound Adjust	Hydraulic Lock-Out, Air spring, Rebound Adjust	Hydraulic Rebound-adjust Remote Lock-out, Air spring	Hydraulic compression and Rebound adjust, Lock-out, Air spring
OCR			Hydraulic Cartridge						TNL-R				OCR	
Air			Air			Coil			Coil		Air		Air	
120, 130, 140, 150 mm			100, 120, 130, 140 mm						29": 120, 130, 140, 150 mm 27.5": 100, 120, 140 mm				80, 100, 120 mm	
51mm			51mm						51mm				51mm	
530 / 540 / 550 / 560			510 / 530 / 540 / 550						29": 540 / 550 / 560 / 570 27.5": 520 / 540 / 560				500 / 520 / 540	
Disc only			Disc only						Disc only				Disc only	
Post			Post						Post				Post	
Max:203 / Min:180			Max:203 / Min:180						Max:203 / Min:180				Max:180 / Min:160	
-			-						-				-	
2.38	2.40	2.38	3.47	3.56	3.50	3.27	3.36	3.30	29": 3.06 27.5": 3.01	29": 3.00 27.5": 2.95	29": 2.86 27.5": 2.81	29": 2.80 27.5": 2.75	2.12	2.10
27.5"x3.0" or 29"x2.25"			27.5"x3.0" or 29"x2.25"						27.5"x2.6" or 29"x2.6"				27.5"x2.8" or 29"x2.6"	
Taiwan			China						China				Taiwan	

Bike Category	110 PLUS																	
Model	F1RST 110-9 29 / 27.5+		F1RST 110-9 27.5 / 26		AERIAL 110-15 29 / 27.5+			AERIAL 110-9 29 / 27.5+			AERIAL 110-9 27.5 / 26			ALPHA 110-15 29 / 27.5+				
	Air-TRL	Air	Air-TRL	Air	RL	TNL	MLC	RL	TNL	MLC	RL	TNL	MLC	RA	RL	TNL	MLC	T
Steerer	28.6mm Aluminum (Optional 1.5" Aluminum tapered steerer)		28.6mm Aluminum (Optional 1.5" Aluminum tapered steerer)		28.6mm Aluminum (Optional 1.5" Aluminum tapered steerer)			28.6mm Aluminum (Optional 1.5" Aluminum tapered steerer)			28.6mm Aluminum (Optional 1.5" Aluminum tapered steerer)			28.6mm Steel (Optional 1.5" Steel tapered steerer)				
Crown	140mm		140mm		140mm			140mm			140mm			140mm				
Stanchion	32mm Aluminum		32mm Aluminum		32mm Steel			32mm Steel			32mm Steel			32mm steel				
	Hard Anodize Black		Hard Anodize Black		QPQ black			QPQ black			QPQ black			CP Finish				
Lower	Magnesium		Magnesium		Magnesium			Magnesium			Magnesium			Magnesium				
	9x110mm open dropout		9x110mm open dropout		15x110mm Bolt Axle			9x110mm open dropout			9x110mm open dropout			15x110mm Bolt Axle				
Feature	Hydraulic Rebound-adjust Remote Lock-out, Air spring	Hydraulic compression and Rebound adjust, Lock-out, Air spring	Hydraulic Rebound-adjust Remote Lock-out, Air spring	Hydraulic compression and Rebound adjust, Lock-out, Air spring	Hydraulic Remote Lock-out, Air spring	Hydraulic Lock-out, Air spring	Mechanical Lock-out, Air spring	Hydraulic Remote Lock-out, Air spring	Hydraulic Lock-out, Air spring	Mechanical Lock-out, Air spring	Hydraulic Remote Lock-out, Air spring	Hydraulic Lock-out, Air spring	Mechanical Lock-out, Air spring	Hydraulic Rebound-adjust	Hydraulic Remote Lock-Out	Hydraulic Lock-Out	Mechanical Lock-out	Preload Adjust
Damper	OCR		OCR		Hydraulic Cartridge		-	Hydraulic Cartridge		-	Hydraulic Cartridge		-	Hydraulic Cartridge			-	
Spring	Air		Air		Air			Air			Air			Coil				
Travel	80, 100, 120 mm		80, 100, 120 mm		80,100,120 mm			80,100,120 mm			80,100,120 mm			80, 100, 120, 130, 135 mm				
Fork offset (mm)	51mm		43mm		51mm			51mm			43mm			51mm				
Fork height (mm)	490/510/530		27.5": 475 / 495 / 515 26": 460 / 480 / 500		500 / 520 / 540			490 / 510 / 530			27.5": 475/495/515 26": 460 / 480 / 500			500 / 520 / 540 / 550 / 555				
Brake Type	Disc only		Disc only		Disc only			Disc only			Disc only			Disc only				
Disc Brake Mount	Post		Post		Post			Post			Post			Post				
Recommended Max.& Min. Rotor Size in mm	Max:180 / Min:160		Max:180 / Min:160		Max:180 / Min:160			Max:180 / Min:160			Max:180 / Min:160			Max:180 / Min:160				
PLS Bracket Mount	-		-		-			-			-			-				
Weight (kgs) (w/steerer at 200mm)	2.02	2.00	1.85	1.83	2.61	2.55	2.32	2.51	2.45	2.22	2.34	2.28	2.05	2.62	2.75	2.64	2.44	2.44
Max Tire (w/o fender)	27.5"x2.8" or 29"x2.4"		27.5"x2.6" or 26"x3.0"		27.5"x2.8" or 29"x2.6"			27.5"x2.8" or 29"x2.4"			27.5"x2.6" or 26"x3.0"			27.5"x2.8" or 29"x2.6"				
Origin of Production	Taiwan		Taiwan		Taiwan			Taiwan			Taiwan			China				

PRODUCT SPEC

110 PLUS										DIRT JUMP								
ALPHA 110-9 29 / 27.5+					ALPHA 110-9 27.5 / 26					SPACE 26		SLOPE	DIRT					
RA	RL	TNL	MLC	T	RA	RL	TNL	MLC	T	Jump	Free		R	RA	T	15 R	15 RA	15 T
28.6mm Steel (Optional 1.5" Steel tapered steerer)					28.6mm Steel (Optional 1.5" Steel tapered steerer)					28.6mm Aluminum (Optional 1.5" Aluminum tapered steerer)	28.6mm Cr-mo steel	28.6mm Aluminum (Optional 1.5" Aluminum tapered steerer)	28.6mm Cr-mo steel					
140mm					140mm					138mm		130mm	130mm					
32mm steel					32mm steel					36mm Aluminum	36mm steel	34mm Aluminum	32mm steel					
CP Finish					CP Finish					Hard Anodize Black	QPQ black	Hard Anodize Black	CP Finish					
Magnesium					Magnesium					Magnesium		Magnesium	Aluminum					
9x110mm open dropout					9x110mm open dropout					20mm Bolt Axle		15mm QR Axle	9mm open dropout			15mm Bolt Axle		
Hydraulic Rebound-adjust	Hydraulic Remote Lock-Out	Hydraulic Lock-Out	Mechanical Lock-out	Preload Adjust	Hydraulic Rebound-adjust	Hydraulic Remote Lock-Out	Hydraulic Lock-Out	Mechanical Lock-out	Preload Adjust	Hydraulic Rebound-adjust, Air spring	Hydraulic Rebound-adjust	Hydraulic compression and Rebound adjust, Air spring	Hydraulic Rebound-fixed	Hydraulic Rebound adjust	Preload Adjust	Hydraulic Rebound-fixed	Hydraulic Rebound adjust	Preload Adjust
Hydraulic Cartridge			-		Hydraulic Cartridge			-		Hydrauic Cartridge		OCR+	Hydrauic Cartridge		-	Hydrauic Cartridge		-
Coil					Coil					Air	Coil	Air	Coil					
80, 100, 120, 130, 140 mm					80, 100, 120, 130, 140 mm					80, 100 mm		80, 100, 130 mm	80, 100, 130 mm					
51mm					43mm					43mm		43mm	38mm					
490 / 510 / 530 / 540 / 550					27.5": 475 / 495 / 515 / 525 / 535 26": 460 / 480 / 500 / 510 / 520					465 / 485		27.5": 475 / 495 / 525 26": 470 / 490 / 520	460 / 480 / 510					
Disc only					Disc only					Disc only		Disc only	Disc or D+V-brake					
Post					Post					Post		Post	Post					
Max:180 / Min:160					Max:180 / Min:160					Max:203 / Min:180		Max:203 / Min:180	Max:180 / Min:160					
-					-					-		-	-					
2.54	2.65	2.57	2.34	2.34	2.37	2.46	2.40	2.17	2.17	2.63	2.93	27.5": 2.00 26": 1.98"	3.01	3.01	3.05	3.06	3.06	3.11
27.5"x2.8" or 29"x2.4"					27.5"x2.6" or 26"x3.0"					26"x2.4"		27.5"x2.4" or 26"x2.4"	26"x2.2"					
China					China					Taiwan		Taiwan	China					

Bike Category	XC 29er				XC 27.5				XC 29er				XC 27.5			
Model	REVEAL 29				REVEAL 27.5				F1RST 29				F1RST 27.5			
	29-15 TRL	29-15	29 TRL	29	27.5-15 TRL	27.5-15	27.5 TRL	27.5	29-15 TRL	29-15	29 TRL	29	27.5-15 TRL	27.5-15	27.5 TRL	27.5
Steerer	28.6mm Aluminum (Optional 1.5" Aluminum tapered steerer)				28.6mm Aluminum (Optional 1.5" Aluminum tapered steerer)				28.6mm Aluminum (Optional 1.5" Aluminum tapered steerer)				28.6mm Aluminum (Optional 1.5" Aluminum tapered steerer)			
Crown	130mm				130mm				130mm				130mm			
Stanchion	32mm Aluminum				32mm Aluminum				32mm Aluminum				32mm Aluminum			
	Hard Anodize Black				Hard Anodize Black				Hard Anodize Black				Hard Anodize Black			
Lower	Magnesium				Magnesium				Magnesium				Magnesium			
	15mm QR Axle		9mm open dropout		15mm QR Axle		9mm open dropout		15mm QR Axle		9mm open dropout		15mm QR Axle		9mm open dropout	
Feature	Hydraulic Rebound-adjust, Remote Lock-out, Air spring	Hydraulic compression and Rebound adjust, Lock-out, Air spring	Hydraulic Rebound-adjust, Remote Lock-out, Air spring	Hydraulic compression and Rebound adjust, Lock-out, Air spring	Hydraulic Rebound-adjust, Remote Lock-out, Air spring	Hydraulic compression and Rebound adjust, Lock-out, Air spring	Hydraulic Rebound-adjust, Remote Lock-out, Air spring	Hydraulic compression and Rebound adjust, Lock-out, Air spring	Hydraulic Rebound-adjust, Remote Lock-out, Air spring	Hydraulic compression and Rebound adjust, Lock-out, Air spring	Hydraulic Rebound-adjust, Remote Lock-out, Air spring	Hydraulic compression and Rebound adjust, Lock-out, Air spring	Hydraulic Rebound-adjust, Remote Lock-out, Air spring	Hydraulic compression and Rebound adjust, Lock-out, Air spring	Hydraulic Rebound-adjust, Remote Lock-out, Air spring	Hydraulic compression and Rebound adjust, Lock-out, Air spring
Damper	OCR+				OCR+				BO-TNL				BO-TNL			
Spring	Air				Air				Air				Air			
Travel	80, 100, 120 mm				80, 100, 120 mm				80, 100, 120 mm				80, 100, 120 mm			
Fork offset (mm)	51mm				43mm				51mm				43mm			
Fork height (mm)	495 / 515 / 535				485 / 505 / 525				495/515/535				485 / 505 / 525			
Brake Type	Disc only				Disc only				Disc only				Disc only			
Disc Brake Mount	Post				Post				Post				Post			
Recommended Max.& Min. Rotor Size in mm	Max:180 / Min:160				Max:180 / Min:160				Max:180 / Min:160				Max:180 / Min:160			
PLS Bracket Mount	-				-				-				-			
Weight (kgs) (w/steerer at 200mm)	1.82	1.80	1.78	1.75	1.78	1.76	1.73	1.71	2.15	2.13	1.96	1.94	2.14	2.12	2.04	2.02
Max Tire (w/o fender)	29"x2.6"				27.5"x2.6"				29"x2.6"				27.5"x2.6"			
Origin of Production	Taiwan				Taiwan				Taiwan				Taiwan			

PRODUCT SPEC

XC 29er		XC 27.5		XC 29er						XC 27.5					
AERIAL Rebound 29		**AERIAL Rebound 27.5**		**AERIAL 29**						**AERIAL 27.5**					
RL-R	TNL-R	RL-R	TNL-R	29-15 RL	29-15 TNL	29-15 MLC	29 RL	29 TNL	29 MLC	27.5-15 RL	27.5-15 TNL	27.5-15 MLC	27.5 RL	27.5 TNL	27.5 MLC
28.6mm Aluminum (Optional 1.5" Aluminum tapered steerer)		28.6mm Aluminum (Optional 1.5" Aluminum tapered steerer)		28.6mm Aluminum (Optional 1.5" Aluminum tapered steerer)						28.6mm Aluminum (Optional 1.5" Aluminum tapered steerer)					
130mm		130mm		130mm						130mm					
32mm Steel		32mm Steel		32mm Steel						32mm Steel					
QPQ black		QPQ black		QPQ black						QPQ black					
Magnesium		Magnesium		Magnesium						Magnesium					
9mm open dropout		9mm open dropout		15mm Bolt Axle			9mm open dropout			15mm Bolt Axle			9mm open dropout		
Hydraulic Rebound-adjust, Remote Lock-out, Air spring	Hydraulic Rebound-adjust, Lock-out, Air spring	Hydraulic Rebound-adjust, Remote Lock-out, Air spring	Hydraulic Rebound-adjust, Lock-out, Air spring	Hydraulic Remote Lock-out, Air spring	Hydraulic Lock-out, Air spring	Mechanical Lock-out, Air spring	Hydraulic Remote Lock-out, Air spring	Hydraulic Lock-out, Air spring	Mechanical Lock-out, Air spring	Hydraulic Remote Lock-out, Air spring	Hydraulic Lock-out, Air spring	Mechanical Lock-out, Air spring	Hydraulic Remote Lock-out, Air spring	Hydraulic Lock-out, Air spring	Mechanical Lock-out, Air spring
TNL-R		TNL-R		Hydraulic Cartridge		-	Hydraulic Cartridge		-	Hydraulic Cartridge		-	Hydraulic Cartridge		-
Air		Air		Air						Air					
80,100,120 mm		80, 100,120 mm		80,100,120 mm						80, 100,120 mm					
51mm		43mm		51mm						43mm					
495 / 515 / 535		485 / 505 / 525		495 / 515 / 535						485 / 505 / 525					
Disc only		Disc only		Disc only						Disc only					
Post		Post		Post						Post					
Max:180 / Min:160		Max:180 / Min:160		Max:180 / Min:160						Max:180 / Min:160					
-		-		-						-					
2.40	2.34	2.55	2.49	2.46	2.40	2.20	2.41	2.35	2.15	2.41	2.35	2.15	2.36	2.30	2.10
29"x2.6"		27.5"x2.6"		29"x2.6"						27.5"x2.6"					
Taiwan		Taiwan		Taiwan						Taiwan					

Bike Category	XC 29er							
Model	OMEGA 29							
	29-15 RL	29-15 TNL	29-15 MLC	29-15 T	29 RL	29 TNL	29 MLC	29 T
Steerer	28.6mm Steel (Optional 1.5" Steel tapered steerer)							
Crown	130mm							
Stanchion	32 steel							
	CP Finish							
Lower	Magnesium							
	15mm Bolt Axle				9mm open dropout			
Feature	Hydraulic Remote Lock-Out	Hydraulic Lock-Out	Mechanical Lock-out	Preload Adjust	Hydraulic Remote Lock-Out	Hydraulic Lock-Out	Mechanical Lock-out	Preload Adjust
Damper	Hydraulic Cartridge		-		Hydraulic Cartridge		-	
Spring	Coil							
Travel	80, 100, 120 mm							
Fork offset (mm)	51mm							
Fork height (mm)	495 / 515 / 535							
Brake Type	Disc only							
Disc Brake Mount	Post							
Recommended Max.& Min. Rotor Size in mm	Max:180 / Min:160							
PLS Bracket Mount	-							
Weight (kgs) (w/steerer at 200mm)	2.60	2.52	2.29	2.29	2.55	2.47	2.29	2.29
Max Tire (w/o fender)	29"x2.6"							
Origin of Production	China							

Bike Category	XC 27.5							
Model	OMEGA 27.5							
	27.5-15 RL	27.5-15 TNL	27.5-15 MLC	27.5-15 T	27.5 RL	27.5 TNL	27.5 MLC	27.5 T
Steerer	28.6mm Steel (Optional 1.5" Steel tapered steerer)							
Crown	130mm							
Stanchion	32 steel							
	CP Finish							
Lower	Magnesium							
	15mm Bolt Axle				9mm open dropout			
Feature	Hydraulic Remote Lock-Out	Hydraulic Lock-Out	Mechanical Lock-out	Preload Adjust	Hydraulic Remote Lock-Out	Hydraulic Lock-Out	Mechanical Lock-out	Preload Adjust
Damper	Hydraulic Cartridge		-		Hydraulic Cartridge		-	
Spring	Coil							
Travel	80, 100, 120 mm							
Fork offset (mm)	43mm							
Fork height (mm)	495/505/525							
Brake Type	Disc only							
Disc Brake Mount	Post							
Recommended Max.& Min. Rotor Size in mm	Max:180 / Min:160							
PLS Bracket Mount	-							
Weight (kgs) (w/steerer at 200mm)	2.71	2.65	2.42	2.42	2.71	2.65	2.42	2.42
Max Tire (w/o fender)	27.5"x2.6"							
Origin of Production	China							

Bike Category	XC 26			
Model	OMEGA 26			
	26 RL	26 TNL	26 MLC	26 T
Steerer	28.6mm Steel (Optional 1.5" Steel tapered steerer)			
Crown	130mm			
Stanchion	32mm Steel			
	CP Finish			
Lower	Magnesium			
	9mm open dropout			
Feature	Hydraulic Remote Lock-Out	Hydraulic Lock-Out	Mechanical Lock-out	Preload Adjust
Damper	Hydraulic Cartridge		-	
Spring	Coil			
Travel	80,100, 120 mm			
Fork offset (mm)	38mm			
Fork height (mm)	460 / 480 / 500			
Brake Type	Disc or D+V-brake			
Disc Brake Mount	Post			
Recommended Max.& Min. Rotor Size in mm	Max:180 / Min:160			
PLS Bracket Mount	-			
Weight (kgs) (w/steerer at 200mm)	2.61	2.53	2.30	2.30
Max Tire (w/o fender)	26"x2.4"			
Origin of Production	Taiwan			

PRODUCT SPEC

XC 29er				XC 27.5"				XC 26"			
BLAZE 29				**BLAZE 27.5**				**ALEX**			
29 RL	29 TNL	29 MLC	29 T	27.5 RL	27.5 TNL	27.5 MLC	27.5 T	26 RL	26 TNL	26 MLC	26 T
28.6mm Steel (Optional 1.5" Steel tapered steerer)				28.6mm Steel				28.6mm Steel			
130mm				130mm				125mm			
30mm Steel				30mm steel				30mm Steel			
CP Finish				CP Finish				CP Finish			
Aluminum				Aluminum				Aluminum			
15mm Bolt Axle / 9mm open dropout				15mm Bolt Axle / 9mm open dropout				9mm open dropout			
Hydraulic Remote Lock-Out	Hydraulic Lock-Out	Mechanical Lock-Out	Preload Adjust	Hydraulic Remote Lock-Out	Hydraulic Lock-Out	Mechanical Lock-Out	Preload Adjust	Hydraulic Remote Lock-Out	Hydraulic Lock-Out	Mechanical Lock-Out	Preload Adjust
Hydraulic Cartridge		-		Hydraulic Cartridge		-		Hydraulic Cartridge		-	
Coil				Coil				Coil			
80, 100, 120 mm				80, 100, 120 mm				80, 100 mm			
51mm				44mm				38mm			
500 / 520 / 540				475 / 495 / 515				460 / 480			
Disc Only				Disc Only				Disc only			
Post				Post				Post			
Max:180 / Min:160				Max:180 / Min:160				Max:180 / Min:160			
-				-				-			
15: 2.95 9: 2.90	15: 2.89 9: 2.84	15: 2.66 9: 2.61	15:2.66 9:2.61	15: 2.87 9: 2.82	15: 2.81 9: 2.76	15: 2.56 9: 2.51	15: 2.60 9: 2.55	2.82	2.76	2.51	2.55
29"x2.6"				27.5"x2.6"				26"x2.2"			
China				China				China			

Bike Category	XC/Sport 29er				XC/Sport 27.5"				XC/Sport 26"			
Model	GILA 29				GILA 27.5				GILA 26			
	29 RL	29TNL	29 MLC	29 T	27.5 RL	27.5 TNL	27.5 MLC	27.5 T	26 RL	26 TNL	26 MLC	26 T
Steerer	28.6mm Steel				28.6mm Steel				28.6mm Steel			
Crown	130mm				125mm				125mm			
Stanchion	28.6mm steel				28.6mm steel				28.6mm steel			
	CP Finish				CP Finish				CP Finish			
Lower	Aluminum				Aluminum				Aluminum			
	9mm open dropout				9mm open dropout				9mm open dropout			
Feature	Hydraulic Remote Lock-Out	Hydraulic Lock-Out	Mechanical Lock-Out	Preload Adjust	Hydraulic Remote Lock-Out	Hydraulic Lock-Out	Mechanical Lock-Out	Preload Adjust	Hydraulic Remote Lock-Out	Hydraulic Lock-Out	Mechanical Lock-Out	Preload Adjust
Damper	Hydraulic Cartridge		-		Hydraulic Cartridge		-		Hydraulic Cartridge		-	
Spring	Coil				Coil				Coil			
Travel	80, 100, 120 mm				80, 100 mm				80, 100 mm			
Fork offset (mm)	51mm				43mm				38mm			
Fork height (mm)	490 / 510 / 530				475 / 495				460 / 480			
Brake Type	Disc only				Disc or D+V-brake				Disc or D+V-brake			
Disc Brake Mount	Post				Post				Post			
Recommended Max.& Min. Rotor Size in mm	Max:180 / Min:160				Max:180 / Min:160				Max:180 / Min:160			
PLS Bracket Mount	-				-				-			
Weight (kgs) (w/steerer at 200mm)	2.70	2.64	2.41	2.36	2.50	2.44	2.19	2.14	2.41	2.35	2.10	2.05
Max Tire (w/o fender)	29"x2.4"				27.5"x2.4"				26"x2.2"			
Origin of Production	China				China				China			

PRODUCT SPEC

XC/Sport 26"				Pavement						JUNIOR				
ANGEL				CAPA						SNYPER		IGNITE		
26 RL	26 TNL	26 MLC	26 T	29 MLC	29 T	27.5 MLC	27.5 T	26 MLC	26 T	24 TRL	24	24 RL	24 TNL	24 MLC
28.6mm Steel				28.6mm Steel		28.6mm Steel		28.6/25.4mm Steel		28.6mm Aluminum (Optional 1.5" Aluminum tapered steerer)		28.6mm Aluminum (Optional 1.5" Aluminum tapered steerer)		
112mm				125mm		125mm		120mm		130mm		130mm		
28.6mm Steel				25.4mm steel		25.4mm steel		25.4mm steel		32mm Aluminum		32mm Steel		
CP Finish				CP Finish		CP Finish		CP Finish		Hard Anodize Black		QPQ black		
Magnesium				Aluminum		Aluminum		Aluminum		Magnesium		Magnesium		
9mm open dropout				9mm open dropout		9mm open dropout		9mm open dropout		9mm open dropout		9mm open dropout		
Hydraulic Remote Lock-Out	Hydraulic Lock-Out	Mechanical Lock-Out	Preload Adjust	Mechanical Lock-Out	Preload Adjust	Mechanical Lock-Out	Preload Adjust	Mechanical Lock-Out	Preload Adjust	Hydraulic Rebound-adjust Remote Lock-out, Air spring	Hydraulic compression and Rebound adjust, Lock-out, Air spring	Hydraulic Remote Lock-out, Air spring	Hydraulic Lock-out, Air spring	Mechanical Lock-out, Air spring
Hydraulic Cartridge		-		-		-		-		OCR		TNL-F		-
Coil				Coil		Coil		Coil		Air		Air		
60, 75 mm				60, 80 mm		60, 80 mm		80mm		60, 70, 80, 100, 120 mm		80, 100, 120 mm		
43mm				51mm		43mm		38mm		38mm		38mm		
450 / 460				470 / 490		455 / 475		460		410 / 420 / 430 / 450 / 470		430 / 450 / 470		
Disc or D+V-brake				Disc or D+V brake		Disc or D+V brake		Disc or D+V brake		Disc only		Disc only		
IS				Post		Post		IS		Post		Post		
Max:160 / Min:140				Max:180 / Min:160		Max:180 / Min:160		Max:160 / Min:140		Max:180 / Min:160		Max:180 / Min:160		
-				-		-		-		-		-		
2.22	2.16	2.11	2.05	2.28	2.23	2.15	2.10	2.03	1.98	1.87	1.85	2.31	2.25	2.05
26"x2.2"				29"x2.4"		27.5"x2.4"		26"x2.2"		24"x2.2"		24"x2.2"		
China				China		China		China		Taiwan		Taiwan		

Bike Categor	JUNIOR															
Model	SPEX				SPARK				F1RST 26				F1RST 24			
	20 TRL	20 AIR	20-15 TRL	20-15 AIR	20 RL	20 TNL	20-15 RL	20-15 TNL	26-15 TRL	26-15	26 TRL	26	24-15 TRL	24-15	24 TRL	24
Steerer	28.6mm Aluminum				28.6mm Aluminum				28.6mm Aluminum (Optional 1.5" Aluminum tapered steerer)				28.6mm Aluminum (Optional 1.5" Aluminum tapered steerer)			
Crown	125mm				125mm				130mm				130mm			
Stanchion	30mm Aluminum				30mm steel				32mm Aluminum				32mm Aluminum			
	Hard Anodize Black				QPQ black				Hard Anodize Black				Hard Anodize Black			
Lower	Magnesium				Magnesium				Magnesium				Magnesium			
	9mm open dropout		15mm Bolt Axle		9mm open dropout		15mm Bolt Axle		15mm Bolt Axle		9mm open dropout		15mm Bolt Axle		9mm open dropout	
Feature	Hydraulic Rebound-adjust, Remote Lock-out, Air spring	Hydraulic compression and Rebound adjust,Lock-out, Air spring	Hydraulic Rebound-adjust, Remote Lock-out, Air spring	Hydraulic compression and Rebound adjust, Lock-out, Air spring	Hydraulic Remote Lock-out, Air spring	Hydraulic Lock-out, Air spring	Hydraulic Remote Lock-out, Air spring	Hydraulic Lock-out, Air spring	Hydraulicb Rebound adjust, Remote Lock-out, Air spring	Hydraulic compression and Rebound adjust, Lock-out, Air spring	Hydraulic Rebound-adjust, Remote Lock-out, Air spring	Hydraulic compression and Rebound adjust, Lock-out, Air spring	Hydraulic Rebound-adjust, Remote Lock-out, Air spring	Hydraulic compression and Rebound adjust, Lock-out, Air spring	Hydraulic Rebound-adjust, Remote Lock-out, Air spring	Hydraulic compression and Rebound adjust, Lock-out, Air spring
Damper	OCR				TNL-F				BO-TNL				BO-TNL			
Spring	Air				Air				Air				Air			
Travel	60, 80, 100 mm				60, 80, 100 mm				60, 80,100, 120 mm				60, 80, 100, 120 mm			
Fork offset (mm)	38mm				38mm				38mm				38mm			
Fork height (mm)	383 / 403/ 423				383 / 403 / 423				440 / 460 / 480 / 500				440 / 460 / 480 / 500			
Brake Type	Disc or D+V brake				Disc or D+V brake				Disc only				Disc Only			
Disc Brake Mount	Post				Post				Post				Post			
Recommended Max.& Min. Rotor Size in mm	Max:180 / Min:160				Max:180 / Min:160				Max:180 / Min:160				Max:180 / Min:160			
PLS Bracket Mount	-				-				-				-			
Weight (kgs) (w/steerer at 200mm)	1.70	1.65	1.80	1.75	2.31	2.25	2.26	2.20	1.72	1.70	1.67	1.65	1.72	1.70	1.67	1.65
Max Tire (w/o fender)	20"x2.4"				20"x2.4"				26"x2.4"				24"x2.6"			
Origin of Production	Taiwan				Taiwan				Taiwan				Taiwan			

JUNIOR													
AERIAL 26						AERIAL 24						CAPA	
26 RL	26 TNL	26 MLC	26 RL	26 TNL	26 MLC	24-15 RL	24-15 TNL	24 MLC	24 RL	24 TNL	24 MLC	24 MLC	24T, 20T
28.6mm Aluminum (Optional 1.5" Aluminum tapered steerer)						28.6mm Aluminum (Optional 1.5" Aluminum tapered steerer)						28.6/25.4mm Steel	
130mm						130mm						120mm	
32mm Steel						32mm steel						25.4 steel	
QPQ black						QPQ black						CP Finish	
Magnesium						Magnesium						Aluminum	
15mm bolt axle			9mm open dropout			15mm bolt Axle			9mm open dropout			9mm open dropout	
Hydraulic Remote Lock-out, Air spring	Hydraulic Lock-out, Air spring	Mechanical Lock-out, Air spring	Hydraulic Remote Lock-out, Air spring	Hydraulic Lock-out, Air spring	Mechanical Lock-out, Air spring	Hydraulic Remote Lock-out, Air Spring	Hydraulic Lock-out, Air Spring	Mechanical Lock-out, Air spring	Hydraulic Remote Lock-out, Air Spring	Hydraulic Lock-out, Air Spring	Mechanical Lock-out, Air spring	Mechanical Lock-Out	Preload Adjust
Hydraulic Cartridge		-	Hydraulic Cartridge		-	Hydraulic Cartridge						-	-
Air						Air						Coil	
80,100,120 mm						60, 80, 100, 120 mm						24": 50 mm	24"/20": 50 mm
38mm						38mm						38mm	
460 / 480 / 500						440 / 460 / 480 / 500						24": 399	24/20": 393 / 373
Disc only						Disc only						Disc or D+V-brake	
Post						Post						IS	
Max:180 / Min:160						Max:180 / Min:160						Max:160 / Min:140	
-						-						-	
2.12	2.10	1.90	2.07	2.05	1.85	2.12	2.10	1.90	2.07	2.05	1.85	1.93	1.84/1.75
26"x2.4"						24"x2.6"						24"x2.2"/ 20"X2.2"	
Taiwan						Taiwan						China	

Bike Category	CARGO					E-Bike							
Model	GARY	PORTER		BEAST		PULSE AIR							
	20T	20-15 T	20 T	24-15 R	24-15 T	29-15 RL	29-15 TNL	29 RL	29 TNL	27.5-15 RL	27.5-15 TNL	27.5 RL	27.5 TNL
Steerer	28.6mm Steel	28.6mm Cr-mo steel		1.5" Steel tapered steerer		1.5" Steel tapered steerer (Optional 1.5" Aluminum tapered steerer)		28.6mm Steel (Optional 1.5" Steel tapered steerer)		28.6mm Steel (Optional 1.5" Steel tapered steerer)			
Crown	125mm	125mm		135mm		130mm		130mm		130mm			
Stanchion	28.6mm steel	30mm steel		36mm Steel		32mm steel		30mm steel		30mm Steel			
	CP Finish	CP Finish		CP Finsh		QPQ black		QPQ black		QPQ black			
Lower	Aluminum	Magnesium		Aluminum		Magnesium		Aluminum		Aluminum			
	9mm open dropout	15mm QRt Axle	9mm open dropout	15mm Bolt Axle		15mm QR Axle		9mm open dropout		15mm Bolt Axle		9mm open dropout	
Feature	Preload Adjust	Preload Adjust		Hydraulic Rebound-fixed	Preload Adjust	Hydraulic Remote Lock-out, Air spring	Hydraulic Lock-out, Air spring	Hydraulic Remote Lock-out, Air spring	Hydraulic Lock-out, Air spring	Hydraulic Remote Lock-out, Air spring	Hydraulic Lock-out, Air spring	Hydraulic Remote Lock-out, Air spring	Hydraulic Lock-out, Air spring
Damper	-	-		Hydraulic Cartridge	-	Hydraulic Cartridge		Hydraulic Cartridge		Hydraulic Cartridge			
Spring	Coil	Coil		Coil		Air		Air		Air			
Travel	50mm	60, 80 mm		50, 60, 70 mm		50, 60, 80, 100 mm		50, 60 mm		60, 80, 100 mm			
Fork offset (mm)	43mm	38mm		38mm		51mm		51mm		43mm			
Fork height (mm)	373	383 / 403		414 / 424 / 434		460 / 470 / 490 / 510		470 / 480		455 / 475 / 495			
Brake Type	Disc & V-brake	Disc or D+V-brake		Disc only		Disc only		Disc only		Disc only			
Disc Brake Mount	IS	Post		Post		Post		Post		Post			
Recommended Max.& Min. Rotor Size in mm	Max:160 / Min:140	Max:180 / Min:160		Max:203 / Min:180		Max:180 / Min:160		Max:180 / Min:160		Max:180 / Min:160			
PLS Bracket Mount	-	-		-		-		-		-		-	
Weight (kgs) (w/steerer at 200mm)	2.17	2.09	2.14	2.95	3.00	2.69	2.63	2.89	2.83	2.66	2.60	2.61	2.55
Max Tire (w/o fender)	20"x2.6"	20"x2.4"		24"x2.6"		29"x2.4"		29"x2.6"		27.5"x2.6"			
Origin of Production	China	China		China		Taiwan		Taiwan		Taiwan			

PRODUCT SPEC

E-Bike								CROSS TREKKING							
PULSE COIL								VOGUE E				VIVAir E			
29-15 RL	29-15 TNL	29 RL	29 TNL	27.5-15 RL	27.5-15 TNL	27.5 RL	27.5 TNL	Air TRL	Air	15 Air TRL	15 Air	RL	TNL	15 RL	15 TNL
1.5" Aluminum tapered steerer (Optional 1.5" Aluminum tapered steerer)		28.6mm Steel (Optional 1.5" Steel tapered steerer)		28.6mm Steel (Optional 1.5" Steel tapered steerer)				1.5" Aluminum tapered steerer				28.6mm Steel (Optional 1.5" Aluminum tapered steerer)			
130mm				130mm				130mm				130mm			
30mm Steel				32mm Steel				30mm Aluminum				30mm steel			
QPQ black				QPQ black				Hard Anodize Black				QPQ black			
Magnesium		Aluminum		Aluminum				Aluminum				Aluminum			
15mm QR Axle		9mm open dropout		15mm Bolt Axle		9mm open dropout		9mm open dropout		15mm Bolt Axle		9mm open dropout		15mm Bolt Axle	
Hydraulic Remote Lock-out	Hydraulic Lock-out	Hydraulic Remote Lock-out	Hydraulic Lock-out	Hydraulic Remote Lock-out	Hydraulic Lock-out	Hydraulic Rebound Lock-out	Hydraulic Lock-out	Hydraulic Rebound-adjust, Remote Lock-out, Air spring	Hydraulic compression and Rebound adjust, Lock-out, Air spring	Hydraulic Rebound-adjust, Remote Lock-out, Air spring	Hydraulic compression and Rebound adjust, Lock-out, Air spring	Hydraulic Remote Lock-out, Air spring	Hydraulic Lock-out, Air spring	Hydraulic Remote Lock-out, Air spring	Hydraulic Lock-out, Air spring
Hydraulic Cartridge				Hydraulic Cartridge				Hydraulic Cartridge				Hydraulic Cartridge			
Coil				Coil				Air				Air			
80, 100mm		50mm		60, 80, 100 mm				50, 60, 80 mm				50, 60, 80 mm			
51mm				43mm				44mm				44mm			
490 / 510		470		455 / 475 / 495				460 / 470 / 490				460 / 470 / 490			
Disc only				Disc only				Disc only				Disc only			
Post				Post				Post				Post			
Max:180 / Min:160				Max:180 / Min:160				Max:180 / Min:160				Max:180 / Min:160			
-		-		-				yes				yes			
2.89	2.83	2.90	2.84	2.76	2.70	2.71	2.65	2.25	2.23	2.30	2.28	2.80	2.74	2.85	2.79
29"x2.4"		29"x2.6"		27.5"x2.6"				700x50C				700x50C			
Taiwan		Taiwan		Taiwan				Taiwan				Taiwan			

Bike Category	CROSS TREKKING															
Model	VOGUE		VIVAir		VITA				AVALON							
	Air TRL	Air	RL	TNL	RL	TNL	MLC	T	RL	TNL	MLC	T	15 RL	15 TNL	15 MLC	15 T
Steerer	28.6mm Aluminum (Optional 1.5" Aluminum tapered steerer)		28.6mm Aluminum (Optional 1.5" Aluminum tapered steerer)		28.6mm Steel (Optional 1.5" Steel tapered steerer)				28.6mm Steel (Optional 1.5" Steel tapered steerer)							
Crown	120 mm		120mm		120mm				130mm							
Stanchion	28.6mm Aluminum		28.6mm steel		28.6mm steel				30mm steel							
	Hard Anodize Black		QPQ black		CP Finish				CP Finish							
Lower	Magnesium		Magnesium		Magnesium				Aluminum							
	9mm open dropout		9mm open dropout		9mm open dropout				9mm open dropout				15mm Bolt Axle			
Feature	Hydraulic Rebound-adjust, Remote Lock-out, Air spring	Hydraulic compression and Rebound adjust, Lock-out, Air spring	Hydraulic Remote Lock-out, Air spring	Hydraulic Lock-out, Air spring	Hydraulic Remote Lock-Out	Hydraulic Lock-Out	Mechanical Lock-Out	Preload Adjust	Hydraulic Remote Lock-Out	Hydraulic Lock-out,	Mechanical Lock-Out	Preload Adjust	Hydraulic Remote Lock-Out	Hydraulic Lock-out,	Mechanical Lock-Out	Preload Adjust
Damper	OCR		Hydraulic Cartridge		Hydraulic Cartridge		-		Hydraulic Cartridge		-		Hydraulic Cartridge		-	
Spring	Air		Air		Coil				Coil							
Travel	50, 60, 80 mm		50, 60, 80 mm		50, 60, 80 mm				50, 60, 80 mm							
Fork offset (mm)	44mm		44mm		44mm				44mm							
Fork height (mm)	460 / 470 / 490		460 / 470 / 490		460 / 470 / 490				440 / 450 / 470							
Brake Type	Disc or D+V-brake		Disc or D+V-brake		Disc or D+V-brake				Disc only							
Disc Brake Mount	Post		Post		Post				Post							
Recommended Max.& Min. Rotor Size in mm	Max:180 / Min:160		Max:180 / Min:160		Max:180 / Min:160				Max:180 / Min:160							
PLS Bracket Mount	yes		yes		yes				yes							
Weight (kgs) (w/steerer at 200mm)	1.80	1.78	2.23	2.17	2.41	2.35	2.13	2.13	2.95	2.89	2.66	2.66	3.00	2.94	2.71	2.71
Max Tire (w/o fender)	700x50C		700x50C		700x50C				26"x2.4"							
Origin of Production	Taiwan		Taiwan		China				China							

PRODUCT SPEC

CROSS TREKKING															
VOLANT								NOVA				NEON PLS			
RL	TNL	MLC	T	15 RL	15 TNL	15 MLC	15 T	RL	TNL	MLC	T	RL	TNL	MLC	T
28.6mm Steel (Optional 1.5" Steel tapered steerer)								28.6mm Steel				28.6mm Steel			
130mm								112mm				112mm			
30mm steel								28.6mm steel				28.6mm steel			
CP Finish								CP Finish				CP Finish			
Aluminum								Aluminum				Aluminum			
9mm open dropout				15mm Bolt Axle				9mm open dropout				9mm open dropout			
Hydraulic Remote Lock-Out	Hydraulic Lock-out,	Mechanical Lock-Out	Preload Adjust	Hydraulic Remote Lock-Out	Hydraulic Lock-out	Mechanical Lock-Out	Preload Adjust	Hydraulic Remote Lock-Out	Hydraulic Lock-Out	Mechanical Lock-Out	Preload Adjust	Hydraulic Remote Lock-Out	Hydraulic Lock-Out	Mechanical Lock-Out	Preload Adjust
Hydraulic Cartridge		-		Hydraulic Cartridge		-		Hydraulic Cartridge		-		Hydraulic Cartridge		-	
Coil								Coil				Coil			
50, 60, 80 mm								50, 60 mm				50, 60 mm			
44mm								44mm				44mm			
460 / 470 / 490								466 / 476				466 / 476			
Disc only								Disc or D+V-brake				Disc or D+V-brake			
Post								Post				Post			
Max:180 / Min:160								Max:180 / Min:160				Max:180 / Min:160			
yes								yes				yes			
2.84	2.78	2.55	2.55	2.85	2.79	2.56	2.56	2.62	2.56	2.35	2.36	2.62	2.56	2.35	2.36
700x50C								700x50C				700x50C			
China								China				China			

Bike Category	CROSS TREKKING											
Model	VERSE				NEON				URBAN			
	RL	TNL	MLC	T	RL	TNL	MLC	T	RL	TNL	MLC	T
Steerer	28.6/25.4mm Steel				28.6/25.4mm Steel				28.6/25.4mm Steel			
Crown	112mm				112mm				112mm			
Stanchion	28.6mm steel				25.4mm steel				25.4mm steel			
	CP Finish				CP Finish				CP Finish			
Lower	Aluminum				Aluminum				Aluminum			
	9mm open dropout				9mm open dropout				9mm open dropout			
Feature	Hydraulic Remote Lock-Out	Hydraulic Lock-Out	Mechanical Lock-Out	Preload Adjust	Hydraulic Remote Lock-Out	Hydraulic Lock-Out	Mechanical Lock-Out	Preload Adjust	Hydraulic Remote Lock-Out	Hydraulic Lock-Out	Mechanical Lock-Out	Preload Adjust
Damper	Hydraulic Cartridge		-		Hydraulic Cartridge		-		Hydraulic Cartridge		-	
Spring	Coil				Coil				Coil			
Travel	40, 50 mm				50, 60 mm				40mm			
Fork offset (mm)	44mm				44mm				44mm			
Fork height (mm)	450 / 460				460 / 470				450			
Brake Type	V-brake only				Disc or Disc+V-brake				Roller& Disc brake only, no V-brake available			
Disc Brake Mount	N/A				Post				IS			
Recommended Max.& Min. Rotor Size in mm	N/A				Max:180 / Min:160				Max:160 / Min:140			
PLS Bracket Mount	no				yes				yes			
Weight (kgs) (w/steerer at 200mm)	2.57	2.51	2.30	2.31	2.17	2.11	1.95	1.94	2.13	2.07	1.86	1.87
Max Tire (w/o fender)	700x50C				700x50C				700x50C			
Origin of Production	China				China				China			

PRODUCT SPEC

SINGLE SHOCK					
Model	SS-A8	SS-A7-T	SS-A7	SS-A2-100	PILOT
Steerer	28.6mm Aluminum (Optional 1.5" Aluminum tapered steerer) (210mm length min.)	28.6mm Aluminum (Optional 1.5" Aluminum tapered steerer) (210mm length min.)	28.6mm Aluminum (Optional 1.5" Aluminum tapered steerer) (210mm length min.)	28.6mm Aluminum (210mm length min.)	1.5 " Aluminum tapered steerer (210mm length min.)
Lower	Aluminum	Aluminum	Aluminum	Aluminum	Aluminum
	9mm open dropout	9mm open dropout	9mm open dropout	9mm open dropout	9mm open dropout
Feature	Alu. Blade Changeable spring	Alu. Blade Spring preload	Alu. Blade	Alu. Blade (straight) Dropout pitch 100mm	Alu. Blade
Spring	Coil with bumper	Coil with bumper	Coil with bumper	Coil with bumper	Coil with bumper
Travel	35mm	30mm	35mm	30mm	40mm
Fork offset (mm)	43mm	43mm	43mm	38mm	45mm
Fork height (mm)	473.5	478.5	473.5	355	495
Brake Type	Disc only or Disc & V-brake (Optional Roller Mount)	Disc only or Disc & V-brake (Optional Roller Mount)		Disc & V-brake	Disc & V-brake (Optional Roller Mount)
Disc Brake Mount	POST	POST		IS	IS
Recommended Max.& Min. Rotor Size in mm	Max:180 / Min:160	Max:180 / Min:160		Max:160 / Min:140	Max:160 / Min:140
Weight (kgs) (w/steerer at 200mm)	1.65	1.70	1.70	1.32	1.70
Max Tire (w/o fender)	700x50C	700x50C	700x50C	20"x1.5"	700x47C
Origin of Production	Taiwan	Taiwan	Taiwan	Taiwan	China

RST GLOBAL NETWORK

- RST Global office
- RST Global distributors
- RST EUROPEAN TEST CENTRE SINGLTREK

RST EUROPEAN TEST CENTRE SINGLTREK POD SMRKEM

http://www.singltrekpodsmrkem.cz/

RST CHINA JIANGSU, CHINA

Manufacturing (domestic)

RST HEADQUARTER, TAIPEI, TAIWAN

Product development, Global sales, Manufacturing

Email: rst@rst.com.tw

RST EUROPE OFFICE, STUTTGART, GERMANY

After-Sales Service, Marketing, Europe sales

Contact: Stephan Guddat

Email: info@rst-europe.eu

RST DISTRIBUTORS

: ARGENTINA
Carlos Karabitian
T 54-351-4936060
F 54-351-4931003
M carlos@karabitian.com.ar

: AUSTRIA
Thalinger Lange GmbH
T +43 7242 497 - 0
M mail@thalinger-lange.com

: BENELUX
Buzaglo B.V.
T 31-36-52-10-100
M info@buzaglo.nl

: BULGARIA
Nikol Bike Center Ltd
T +359 89 5460025
M giono.gionov@bikecenter.bg

: CENTER AMERICA
Distribuidora Ochenta Y Seis S.A.
T 506 4035 2000
M gmendez@d86group.com

: CHILE
Andes Industrial Ltda.
T 56-2-265-03100
F 56-2-719-1136
M andes@andesindustrial.cl

: COLOMBIA
Len Importaciones LTDA
T 577-6712222
M paula.rueda@lenimp.com

: CHINA
Suzhou Dawei Precision Co., Ltd.
T 0512-86160698
F 0512-86160100
M sales2@rst-topway.cn

: CZECH
Universe Agency spol. s.r.o
T 420-244-990-777
M info@author.cz

: FRANCE
RST-Paul Lange France SARL
T +33 388 93 - 2101
M info@paul-lange.fr

: GERMANY
Paul Lange & Co.
T +49-711-258802
M info@paul-lange.de

: GREECE
Nikos Maniatopoulos S.A.
T 30-2610-993045
F 30-2610-990424
M info@idealbikes.net

: HUNGARY
Velobike Kft.
T 36-1-455-8010

: ISRAEL
Ranofun
T +972-4-9522334
P +972-545600212
M ranofun@gmail.com

: ITALY
ROADRUN SRL
T +39 0471 953344
M ordini@roadrun.bike

: PHILIPPINES
Comet Cycle Center
T +63 28372-5590
F +63 23725590
M comet@cometcycle.com

: POLAND
Velo Sp. Z. O. O.
T 48-32-330-67-00
M informacje@velo.com.pl

: PORTUGAL
Motokit
T 351-234-625607
M motokit@motokit.com.pt

: RUSSIA
Maximum Ltd.
T +7-812-740-79-62
M maximum@msgbox.ru

: RUSSIA
Arves Market Ltd.
T +7-499-153-0721
P +7-495-991-6888
M arvesmarket@yandex.ru

: SPAIN
Matxcycle S.L
T +34 943 340415
M pedidos@mycycle.eu

: SWITZERLAND
Fuchs-movesa AG
T +41 56 464 46 46
M info@fuchs-movesa.ch

: SLOVAK REP.
Universe Slovakia s.r.o.
T +421-32-6521902
M author@author.sk

: TAIWAN
RST Greenergy Technology Co. Ltd.
T 886-2-8521-2351
F 886-2-8521-6159
M rst@rst.com.tw

: THAILAND
Asiabike
T 084-718 3392
M info@asiabike.com

: U.S.A
Risse Racing Technology, Inc
T 541-526-7242
M sales@risseracing.com

www.rstsuspension.com

RST
GLOBAL NETWORK

RST TAIWAN

HEAD QUARTER
RST GREENERGY TECH. CO., LTD.
TEL : +886.2.85212351
Email : rst@rst.com.tw

RST EUROPE

RST EUROPE OFFICE
TEL : +49.711.2588255
Email : info@rst-europe.eu

RST CHINA

SUZHOUN DAWEI PRECISION CO., LTD.
TEL : +86.512.86160698
Email : sales2@rst-topway.cn

Rider *Fred Austruy* **Location** *South of France*
Photo by *Thomas Heydon*

ARTISTDESIGN #1101005@500