RST
2020 products
www.rstsuspension.com

LOCAL TEAM SUPPORT

NSD RACING https://www.instagram.com/nsdracing/

SPONSOR PRO-RIDERS

FRED AUSTRUY https://www.facebook.com/fred.austruy

BRAYDEN BARRET-HAY https://www.facebook.com/brayden.barretthay

GREG WATTS https://www.facebook.com/greg.watts.146

JOSH HULT https://www.facebook.com/Josh-Hult-540732435996299/

DEWAYNE TAYLOR https://www.instagram.com/therealfourtyfour/

DAVID HOLCZER https://www.instagram.com/daveholzerbikes/

JAY "CHUBBZ" MAGEE https://www.instagram.com/feelgoodchubbz710/

DOUG MINOR https://www.facebook.com/doug.minor.77

LUKAS RAINER https://www.instagram.com/reinerlukas/
https://www.youtube.com/luxbiketv

NIKI GEORGIEV https://www.facebook.com/nikigeorgiev305

JAKUB VENCL	https://www.facebook.com/jakub.vencl/
RÉMY CARRA	https://www.facebook.com/remy.carra.3
MAX MEY	https://www.facebook.com/mey.maximilian
JOAO MENDES	https://www.facebook.com/joomendes
DOMINIK PUFFER	https://www.facebook.com/dominik.puffer
DANIEL PLENK	https://www.facebook.com/daniel.plenk.7
FREDERIK USBECK	https://www.facebook.com/frederik.usbeck
ALEX METCALFE	https://www.facebook.com/a.j.metcalfe01
MARTI PEARCE	https://www.facebook.com/mcfly.pearce

www.rstsuspension.com
2020

CONTENTS

110 PLUS
09 ROGUE 110-15
10 TITAN 110-15 & VIBE 110-15
11 F1RST 110-15 & AERIAL 110-15
12 ALPHA 110-15 & ALPHA 110-9

DH/FR/AM
14 REBEL V2 29 / 27.5+
15 KILLAH 29
16 STITCH 29
17 KILLAH 27.5 / 26 & STITCH 27.5 / 26
18 ROGUE 27.5 /26 & TITAN 27.5 / 26
19 ROVER 27.5 & STORM 27.5 / 26

FAT BIKE
20 RENEGADE 26
21 GUIDE 26 & 20

XC
23 REVOLT 29-15 / 29
24 REVOLT 27.5-15 / 27.5
25 REVEAL 29-15 / 29
26 REVEAL 27.5-15 / 27.5 / 26
27 F1RST 29-15 / 29
28 F1RST 27.5-15 / 27.5
29 F1RST 26 & PLATINUM
30 AERIAL 29-15
31 AERIAL 29 R / 29
32 AERIAL 27.5 R / 27.5 / 26 R / 26
33 OMEGA 29
34 OMEGA 27.5 / 26
35 BLAZE 29 / 27.5
36 GILA 29 / 27.5 / 26
37 ANGEL 26 & ALEX 26

PAVEMENT
38 CAPA 29 / 27.5 / 26
39 STEM SHOCK

JUNIOR
41 SPEX 20
42 SNYPER 24 & F1RST 24-15
43 F1RST 24 & AERIAL 24
44 CAPA 24 / 20

CARGO
44 PORTER 20 & GARY 20

DIRT JUMP
46 SPACE 26
47 SLOPE 27.5/26 & DIRT-15/9

CROSS TREKKING
49 VOGUE
50 VIVAir & VOLANT-15/9
51 VITA & PLS
52 NOVA & NEON PLS & VERSE
53 NEON & URBAN
54 SS-A7 & A4 / A2
55 SS-M7 / M6

E-BIKE
50 VOLANT-15/9
52 NEON PLS
57 PULSE 29-15 & PULSE 29
58 PULSE 27.5-15 & PULSE 27.5
59 VOGUE E-15/9 & VIVAir E-15/9
60 PILOT

ADJUST SEATPOST
62 ELEV 8 E
63 ELEV 8 H & ELEV 8 A

AM
65 AIR CARTRIDGE / PUMP / GREASE
66 SEAL KITS / SPRING SEAL / ADJUSTER
67 WRENCH / CAP / SRL / O-RING
68 DIMENSIONS
70-93 SPEC
95 RST DISTRIBUTORS

Product Overview

	Taiwan-Made Product													China-Made Product			
	$$$$$					$$$$							$$$	$$			
Down Hill		KILLAH															
Free Ride			STITCH			STORM											
All Mountain	REBEL V2			ROGUE	TITAN		ROVER										
Fat Bike					RENEGADE									GUIDE 26/20			
110-15				ROGUE 110-15	TITAN 110-15	VIBE 110-15				F1RST 110-15		AERIAL 110-15		ALPHA 110-15			
110-9										F1RST 110-9		AERIAL 110-9		ALPHA 110-9			
Xc 29'er						REVOLT 29-15	REVOLT 29	REVEAL 29-15	REVEAL 29	F1RST 29-15	F1RST 29	AERIAL 29 R	AERIAL 29	OMEGA 29	BLAZE 29	GILA 29	
Xc 27.5						REVOLT 27.5-15	REVOLT 27.5	REVEAL 27.5-15	REVEAL 27.5	F1RST 27.5-15	F1RST 27.5	AERIAL 27.5 R	AERIAL 27.5	OMEGA 27.5	BLAZE 27.5	GILA 27.5	
Xc 26									REVEAL 26	F1RST 26	F1RST Platinum	AERIAL 26 R	AERIAL 26	OMEGA 26	ALEX 26	GILA 26	ANGEL 26
Dirt Jump			SPACE 26	SLOPE 27.5/26										DIRT			
Leisure Sport														CAPA 29	CAPA 27.5	CAPA 26	
Junior								SNYPER 24	F1RST 24-15	SPEX 20	F1RST 24		AERIAL 24	PORTER 20	GARY 20	CAPA 24/20	
Cross										VOGUE		VIVAir		VITA	VOLANT	NOVA	NEON
Trekking												Single Shock M series	Single Shock A series	PILOT		VERSE	URBAN
E-City									VOGUE E	VIVAir E	PULSE Air 29 / 27.5	PULSE Coil 29 / 27.5					
Seatpost				ELEV 8 E				ELEV 8 H				ELEV 8 A					
Stem Shock												STEM SHOCK					

No RST forks are approved for front motor use.

Color Options

DK-0011
GLOSS WHITE
(YS-701)

DK-0012
PEARL WHITE
(YS-775)

DK-8010
MATT BLACK
(YS-727)

DK-8011
SHINY BLACK
(YS-728)

Steerer Weight

Steerer Tube		Lenght	Weight
Aluminum 7050	28.6mm	260mm	176g
Aluminum 7050	1.5''	260mm	205g
Aluminum 7050	1.5'' Taper	260mm	186g
Hi-ten	28.6mm	260mm	326g
Hi-ten	25.4mm	260mm	290g
Hi-ten	1.5'' Taper	260mm	415g

110 PLUS

ROGUE 110-15

MODEL	Air TRL	Air	Air w/o Lockout
STEERER	1.5" A7050 Aluminum tapered steerer		
CROWN PITCH	150mm		
CROWN	Aluminum Black		
STANCHION	34mm A7050 Aluminum Hard Anodize Black		
CASTING	Magnesium 15x110mm QR		
ADJUSTMENT	A, R, TRL	A, R, L, C	A, R, C
FEATURES	Hydraulic Rebound adjust, Remote Lock-out, Air Spring	Hydraulic Compression, Rebound adjust, Lock-out, Air Spring	Hydraulic Compression, Rebound adjust Air Spring
SYSTEM	OCR+(R), Air(L)		
TRAVEL (mm)	27.5"+: 120, 130, 140, 150, 160mm		
BRAKE TYPE	Disc Only		
WEIGHT (kgs) (w/ 200mm steerer)	2.35	2.33	2.33

* A: Air, R: Rebound, C: Compression, TRL: Remote Lock-out, L: Lock-out

www.rstsuspension.com

TITAN 110-15

MODEL	Air TRL	Air	Air w/o Lockout
STEERER	1.5" A7050 Aluminum tapered steerer		
CROWN PITCH	150mm		
CROWN	Aluminum Black		
STANCHION	34mm A7050 Aluminum Hard Anodize Black		
CASTING	Magnesium 15x110mm QR		
ADJUSTMENT	A, R, TRL	A, R, L, C	A, R, C
FEATURES	Hydraulic Rebound adjust, Remote Lock-out, Air Spring	Hydraulic Compression, Rebound adjust, Lock-out, Air Spring	Hydraulic Compression, Rebound adjust Air Spring
SYSTEM	OCR(R), Air(L)		
TRAVEL (mm)	27.5"+: 120, 130, 140, 150mm		
BRAKE TYPE	Disc Only		
WEIGHT (kgs) (w/ 200mm steerer)	2.4	2.38	2.38

* A: Air, R: Rebound, C: Compression, TRL: Remote Lock-out, L: Lock-out

VIBE 110-15 AIR/COIL

MODEL	AIR-RA	AIR-RL ◆	AIR-TNL ◆	RA	RL ◆	TNL ◆
STEERER	1.5" Steel tapered steerer					
CROWN PITCH	150mm					
CROWN	Aluminum Black					
STANCHION	34mm Steel QPQ black					
CASTING	Magnesium 15x110mm Bolt Axle					
ADJUSTMENT	R, A	RL, A	L, A	R,P (easy preload)	RL, P (easy preload)	L, P (easy preload)
FEATURES	Hydraulic Rebound adjust Air Spring	Hydraulic Remote Lock-Out Air Spring	Hydraulic Lock-Out Air Spring	Hydraulic Rebound adjust	Hydraulic Remote Lock-Out	Hydraulic Lock-Out
SYSTEM	Oil(R), Air(L)			Oil(R), Coil(L)		
TRAVEL (mm)	27.5"+: 100, 120, 130, 140mm					
BRAKE TYPE	Disc Only					
WEIGHT (kgs) (w/ 200mm steerer)	3.27	3.36	3.3	3.47	3.56	3.5

* RL: Remote Lock-out, L: Lock-out, P: Preload, A: Air
◆ Fixed rebound option

F1RST 110-15 / 110-9

MODEL	110-15 Air TRL	110-15 Air	110-9 Air TRL	110-9 Air
STEERER	28.6mm A7050 Aluminum (Optional 1.5" Aluminum tapered steerer)			
CROWN PITCH	140mm			
CROWN	Aluminum Black			
STANCHION	32mm A7050 Aluminum Hard Anodize Black			
CASTING	Magnesium 15x110mm Bolt Axle		Magnesium 9x110mm Open Dropout	
ADJUSTMENT	A, R, TRL	A, R, L, C	A, R, TRL	A, R, L, C
FEATURES	Hydraulic Rebound adjust, Remote Lock-out, Air Spring	Hydraulic Compression, Rebound adjust, Lock-out, Air Spring	Hydraulic Rebound adjust, Remote Lock-out, Air Spring	Hydraulic Compression, Rebound adjust, Lock-out, Air Spring
SYSTEM	OCR(R), Air(L)			
TRAVEL (mm)	29" / 27.5"+: 80, 100, 120mm		29" / 27.5"+: 80, 100, 120mm 27.5" / 26": 80, 100, 120mm	
BRAKE TYPE	Disc Only			
WEIGHT (kgs) (w/ 200mm steerer)	2.12	2.10	1.95	1.93

* A: Air, R: Rebound, C: Compression, TRL: Remote Lock-out, L: Lock-out

AERIAL 110-15 / 110-9

MODEL	110-15 RL ◆	110-15 TNL ◆	110-15 MLC	110-9 RL ◆	110-9 TNL ◆	110-9 MLC
STEERER	28.6mm A7050 Aluminum (Optional 1.5" Aluminum tapered steerer)					
CROWN PITCH	140mm					
CROWN	Aluminum Black					
STANCHION	32mm Steel QPQ black					
CASTING	Magnesium 15x110mm Bolt Axle			Magnesium 9x110mm Open Dropout		
ADJUSTMENT	A, RL	A, L	A, L	A, RL	A, L	A, L
FEATURES	Hydraulic Remote Lock-out, Air Spring	Hydraulic Lock-out, Air Spring	Mechanical Lock-out, Air Spring	Hydraulic Remote Lock-out, Air Spring	Hydraulic Lock-out, Air Spring	Mechanical Lock-out, Air Spring
SYSTEM	Oil(R), Air(L)		Air(L)	Oil(R), Air(L)		Air(L)
TRAVEL (mm)	29" / 27.5"+: 80, 100, 120mm			29" / 27.5"+: 80, 100, 120mm 27.5" / 26": 80, 100, 120mm		
BRAKE TYPE	Disc Only					
WEIGHT (kgs) (w/ 200mm steerer)	2.55	2.47	2.27	2.38	2.30	2.10

* A: Air, R: Rebound, RL: Remote Lock-out, L: Lock-out

◆ Fixed rebound option

ALPHA 110-15

MODEL	RL ◆	TNL ◆	RA	MLC	T
STEERER	28.6mm Steel (Optional 1.5" Steel tapered steerer)				
CROWN PITCH	140mm				
CROWN	Aluminum Black				
STANCHION	32mm Steel CP Finish				
CASTING	Magnesium 15x110mm Bolt Axle				
ADJUSTMENT	RL, P	L, P	R, P	L, P	P
FEATURES	Hydraulic Remote Lock-Out	Hydraulic Lock-Out	Hydraulic Rebound adjust	Mechanical Lock-Out	-
SYSTEM	Oil(R), Coil(L)			Coil	
TRAVEL (mm)	29" / 27.5"+: 80, 100, 120, 130, 135 mm				
BRAKE TYPE	Disc Only				
WEIGHT (kgs) (w/ 200mm steerer)	2.65	2.57	2.54	2.34	2.34

* RL: Remote Lock-out, L: Lock-out, P: Preload, R: Rebound
◆ Fixed rebound option

ALPHA 110-9

MODEL	RL ◆	TNL ◆	RA	MLC	T
STEERER	28.6mm Steel (Optional 1.5" Steel tapered steerer)				
CROWN PITCH	140mm				
CROWN	Aluminum Black				
STANCHION	32mm Steel CP Finish				
CASTING	Magnesium 9x110mm Open Dropout				
ADJUSTMENT	RL, P	L, P	R, P	L, P	P
FEATURES	Hydraulic Remote Lock-Out	Hydraulic Lock-Out	Hydraulic Rebound adjust	Mechanical Lock-out	-
SYSTEM	Oil(R), Coil(L)			Coil	
TRAVEL (mm)	29" / 27.5"+: 80, 100, 120, 130, 140 mm 27.5" / 26" : 80, 100, 120, 130, 140 mm				
BRAKE TYPE	Disc Only				
WEIGHT (kgs) (w/ 200mm steerer)	2.46	2.4	2.37	2.17	2.17

* RL: Remote Lock-out, L: Lock-out, P: Preload, R: Rebound
◆ Fixed rebound option

DH/FR/AM

Steep descents and technical terrain require top-performance from both riders and their equipment.

Durable construction without a major weight penalty and high performance damping systems distinguish these forks ready for the trail, bike park, even a World Cup course.

REBEL V2 29/27.5+

MODEL	Air TRL	Air	Air w/o Lockout
STEERER	1.5" A7050 Aluminum tapered steerer		
CROWN PITCH	140mm		
STANCHION	32mm A7050 Aluminum Hard Anodize Black		
CASTING	Magnesium 20x110mm Boost Bolt Axle (Optional 15x110 Bolt Axle)		
ADJUSTMENT	A, R, TRL	A, R, L, C	A, R, C
FEATURES	Hydraulic Rebound adjust, Remote Lock-out, Air Spring	Hydraulic Compression, Rebound adjust, Lock-out, Air Spring	Hydraulic Compression, Rebound adjust Air Spring
SYSTEM	OCR+(R), Air(L)		
TRAVEL (mm)	29": 80, 100, 130mm 27.5"+: 100, 130, 140, 150mm		
BRAKE TYPE	Disc Only		
WEIGHT (kgs) (w/ 200mm steerer)	29":2.25 27.5":2.35	29":2.23 27.5":2.33	29":2.23 27.5":2.33

* A: Air, R: Rebound, C: Compression, TRL: Remote Lock-out, L: Lock-out

KILLAH 29

MODEL	
STEERER	28.6mm A7050 Aluminum
CROWN PITCH	145mm-Dual
CROWN	Aluminum Black
STANCHION	38mm A7050 Aluminum Hard Anodize Black
CASTING	Magnesium 20x110mm Boost Bolt Axle
ADJUSTMENT	R, C
FEATURES	Hydraulic Compression, Rebound adjust
SYSTEM	OCR+(R), Coil(L)
TRAVEL (mm)	29": 200mm
BRAKE TYPE	Disc Only
WEIGHT (kgs) (w/ 200mm steerer)	29": 3.25

* R: Rebound, C: Compression

www.rstsuspension.com

STITCH 29

MODEL	
STEERER	1.5" A7050 Aluminum tapered steerer
CROWN PITCH	145mm
CROWN	Aluminum Black
STANCHION	38mm A7050 Aluminum Hard Anodize Black
CASTING	Magnesium 20x110mm Boost Bolt Axle (Optional 15x110 Bolt Axle)
ADJUSTMENT	R, C
FEATURES	Hydraulic Compression, Rebound adjust
SYSTEM	OCR+(R), Coil(L)
TRAVEL (mm)	29": 160, 170, 180mm
BRAKE TYPE	Disc Only
WEIGHT (kgs) (w/ 200mm steerer)	2.88

* R: Rebound, C: Compression

KILLAH 27.5 / 26

MODEL	
STEERER	28.6mm A7050 Aluminum
CROWN PITCH	138mm-Dual
CROWN	Aluminum Black
STANCHION	36mm A7050 Aluminum Hard Anodize Black
CASTING	Magnesium 20mm Bolt Axle
ADJUSTMENT	R, C
FEATURES	Hydraulic Compression, Rebound adjust
SYSTEM	OCR+(R), Coil(L)
TRAVEL (mm)	27.5" / 26":200mm
BRAKE TYPE	Disc Only
WEIGHT (kgs) (w/ 200mm steerer)	27.5": 3.22 26": 3.20

* R: Rebound, C: Compression

STITCH 27.5 / 26 AIR/COIL

MODEL	AIR	COIL
STEERER	28.6mm A7050 Aluminum (Optional 1.5" Aluminum tapered steerer)	
CROWN PITCH	138mm	
CROWN	Aluminum Black	
STANCHION	36mm A7050 Aluminum Hard Anodize Black	
CASTING	Magnesium 20mm QR	
ADJUSTMENT	A, R, C	R, C
FEATURES	Hydraulic Compression, Rebound adjust, Air Spring	Hydraulic Compression, Rebound adjust
SYSTEM	OCR+(R), Air(L)	OCR+(R), Coil(L)
TRAVEL (mm)	27.5" / 26": 160, 170, 180mm	
BRAKE TYPE	Disc Only	
WEIGHT (kgs) (w/ 200mm steerer)	27.5": 2.28 26": 2.26	27.5": 2.57 26": 2.55

* A: Air, R: Rebound, C: Compression

www.rstsuspension.com

ROGUE 27.5/26

MODEL	Air TRL	Air	Air w/o Lockout
STEERER	28.6mm A7050 Aluminum (Optional 1.5" Aluminum tapered steerer)		
CROWN PITCH	130mm		
CROWN	Aluminum Black		
STANCHION	34mm A7050 Aluminum Hard Anodize Black		
CASTING	Magnesium 15mm QR		
ADJUSTMENT	A, R, TRL	A, R, L, C	A, R, C
FEATURES	Hydraulic Rebound adjust, Remote Lock-out, Air Spring	Hydraulic Compression, Rebound adjust, Lock-out, Air Spring	Hydraulic Compression, Rebound adjust, Air Spring
SYSTEM	OCR+(R), Air(L)		
TRAVEL (mm)	27.5" / 26": 140, 150, 160mm		
BRAKE TYPE	Disc Only		
WEIGHT (kgs) (w/ 200mm steerer)	27.5": 2.13 26": 2.00	27.5": 2.11 26": 1.98	27.5": 2.11 26": 1.98

* A: Air, R: Rebound, C: Compression, TRL: Remote Lock-out, L: Lock-out

TITAN 27.5/26

MODEL	Air TRL	Air	Air w/o Lockout
STEERER	28.6mm A7050 Aluminum (Optional 1.5" Aluminum tapered steerer)		
CROWN PITCH	130mm		
CROWN	Aluminum Black		
STANCHION	34mm A7050 Aluminum Hard Anodize Black		
CASTING	Magnesium 15mm QR		
ADJUSTMENT	A, R, TRL	A, R, L, C	A, R, C
FEATURES	Hydraulic Rebound adjust, Remote Lock-out, Air Spring	Hydraulic Compression, Rebound adjust, Lock-out, Air Spring	Hydraulic Compression, Rebound adjust, Air Spring
SYSTEM	OCR(R), Air(L)		
TRAVEL (mm)	27.5" / 26" : 140, 150mm		
BRAKE TYPE	Disc Only		
WEIGHT (kgs) (w/ 200mm steerer)	27.5": 2.18 26": 2.05	27.5": 2.16 26": 2.03	27.5": 2.16 26": 2.03

* A: Air, R: Rebound, C: Compression, TRL: Remote Lock-out, L: Lock-out

ROVER 27.5 AIR/COIL

NEW E-MTB

MODEL	AIR-RA	AIR-RL ◆	AIR-TNL ◆	RA	RL ◆	TNL ◆
STEERER	1.5" Steel tapered steerer					
CROWN PITCH	130 mm					
CROWN	Aluminum Black					
STANCHION	34mm Steel QPQ black					
CASTING	Magnesium 15mm QR					
ADJUSTMENT	R,A	RL, A	L, A	R,P (easy preload)	RL, P (easy preload)	L, P (easy preload)
FEATURES	Hydraulic Rebound adjust, Air Spring	Hydraulic Remote Lock-Out, Air Spring	Hydraulic Lock-Out Air Spring	Hydraulic Rebound adjust	Hydraulic Remote Lock-Out	Hydraulic Lock-Out
SYSTEM	Oil(R), Air(L)			Oil(R), Coil(L)		
TRAVEL (mm)	27.5": 130, 140 mm					
BRAKE TYPE	Disc Only					
WEIGHT (kgs) (w/ 200mm steerer)	2.88	2.97	2.91	3.14	3.23	3.17

* R: Rebound, C: Compression
◆ Fixed rebound option

2019 EFBE 2020 TRI-TEST EPAC MTB-AM CATEGORY 4

STORM 27.5/26

MODEL	RA
STEERER	28.6mm Cr-Mo Steel (Optional 1.5" Aluminum tapered steerer)
CROWN PITCH	138mm
CROWN	Aluminum Black
STANCHION	36mm Steel QPQ Black
CASTING	Magnesium 20mm QR
ADJUSTMENT	R
FEATURES	Hydraulic, Rebound adjust
SYSTEM	Oil(R), Coil(L)
TRAVEL (mm)	27.5" / 26": 160, 170, 180mm
BRAKE TYPE	Disc Only
WEIGHT (kgs) (w/ 200mm steerer)	27.5": 3.34, 26": 3.32

* R: Rebound

www.rstsuspension.com

RENEGADE 26

MODEL	Air TRL	Air	TNL ◆
STEERER	28.6mm A7050 Aluminum (Optional 1.5" Aluminum tapered steerer)		1.5" Steel tapered steerer
CROWN PITCH	190mm		
CROWN	Aluminum Black		
STANCHION	32mm A7050 Aluminum Hard Anodize Black		32 mm Steel CP Finish
CASTING	Magnesium 15mm QR		
ADJUSTMENT	A, R, TRL	A, R, L, C	L, P (easy preload)
FEATURES	Hydraulic Rebound adjust, Remote Lock-out, Air Spring	Hydraulic Compression, Rebound adjust, Lock-out, Air Spring	Hydraulic Lock-Out
SYSTEM	OCR(R), Air(L)		Oil(R), Coil(L)
TRAVEL (mm)	26": 80, 100, 120mm		
BRAKE TYPE	Disc Only		
WEIGHT (kgs) (w/ 200mm steerer)	2.22	2.20	3.0

* A: Air, R: Rebound, C: Compression, TRL: Remote Lock-out, L: Lock-out
◆ Fixed rebound option

GUIDE 26

MODEL	TNL	MLC	T
STEERER	28.6mm Steel (Optional 1.5" Steel tapered steerer)		
CROWN PITCH	180mm		
CROWN	Aluminum Black Coating		
STANCHION	32mm Steel CP Finish		
CASTING	Aluminum 9mm Open Dropout		
ADJUSTMENT	L, P	L, P	P
FEATURES	Hydraulic Lock-Out	Mechanical Lock-Out	–
SYSTEM	Oil(R), Coil(L)	Coil	
TRAVEL (mm)	26": 75, 95mm		
BRAKE TYPE	Disc Only		
WEIGHT (kgs) (w/ 200mm steerer)	3.62	3.47	3.32

* L: Lock-out, P: Preload

GUIDE 20

MODEL	TNL	MLC	T
STEERER	28.6mm Steel (Optional 1.5" Steel tapered steerer)		
CROWN PITCH	180mm		
CROWN	Aluminum Black Coating		
STANCHION	32mm Steel CP Finish		
CASTING	Aluminum 9mm Open Dropout		
ADJUSTMENT	L, P	L, P	P
FEATURES	Hydraulic Lock-Out	Mechanical Lock-Out	–
SYSTEM	Oil(R), Coil(L)	Coil	
TRAVEL (mm)	20": 45, 60mm		
BRAKE TYPE	Disc Only		
WEIGHT (kgs) (w/ 200mm steerer)	3.37	3.22	3.07

* L: Lock-out, P: Preload

www.rstsuspension.com
RST

XC

Lightweight and efficient suspension from 80mm to 120mm distinguish the XC and touring lineups. Forks with a perfectly balanced mixture of comfort, performance and trail control ready for enjoying your local trail network to competing in the toughest race events.

REVOLT 29-15

MODEL	TRL	AIR
STEERER	1.5" A7050 Aluminum tapered steerer	
CROWN PITCH	130mm	
CROWN	Aluminum Black	
STANCHION	32mm A7050 Aluminum Hard Anodize Black	
CASTING	Magnesium 15mm QR	
ADJUSTMENT	A, R, TRL	A, R, L, C
FEATURES	Hydraulic Rebound adjust Remote Lock-out, Air Spring	Hydraulic Compression, Rebound adjust, Lock-out, Air Spring
SYSTEM	OCR(R), Air(L)	
TRAVEL (mm)	29": 130, 140mm	
BRAKE TYPE	Disc Only	
WEIGHT (kgs) (w/ 200mm steerer)	2.05	2.03

* A: Air, R: Rebound, C: Compression, TRL: Remote Lock-out, L: Lock-out

REVOLT 29

MODEL	TRL	AIR
STEERER	1.5" A7050 Aluminum tapered steerer	
CROWN PITCH	130mm	
CROWN	Aluminum Black	
STANCHION	32mm A7050 Aluminum Hard Anodize Black	
CASTING	Magnesium 9mm Open Dropout	
ADJUSTMENT	A, R, TRL	A, R, L, C
FEATURES	Hydraulic Rebound adjust Remote Lock-out, Air Spring	Hydraulic Compression, Rebound adjust, Lock-out, Air Spring
SYSTEM	OCR(R), Air(L)	
TRAVEL (mm)	29": 130, 140mm	
BRAKE TYPE	Disc Only	
WEIGHT (kgs) (w/ 200mm steerer)	1.91	1.89

* A: Air, R: Rebound, C: Compression, TRL: Remote Lock-out, L: Lock-out

www.rstsuspension.com
RST

REVOLT 27.5-15

MODEL	TRL	AIR
STEERER	1.5" A7050 Aluminum tapered steerer	
CROWN PITCH	130mm	
CROWN	Aluminum Black	
STANCHION	32mm A7050 Aluminum Hard Anodize Black	
CASTING	Magnesium 15mm QR	
ADJUSTMENT	A, R, TRL	A, R, L, C
FEATURES	Hydraulic Rebound adjust, Remote Lock-out, Air Spring	Hydraulic Compression, Rebound adjust, Lock-out, Air Spring
SYSTEM	OCR(R), Air(L)	
TRAVEL (mm)	27.5": 130, 140mm	
BRAKE TYPE	Disc Only	
WEIGHT (kgs) (w/ 200mm steerer)	2.03	2.01

* A: Air, R: Rebound, C: Compression, TRL: Remote Lock-out, L: Lock-out

REVOLT 27.5

MODEL	TRL	AIR
STEERER	1.5" A7050 Aluminum tapered steerer	
CROWN PITCH	130mm	
CROWN	Aluminum Black	
STANCHION	32mm A7050 Aluminum Hard Anodize Black	
CASTING	Magnesium 9mm Open Dropout	
ADJUSTMENT	A, R, TRL	A, R, L, C
FEATURES	Hydraulic Rebound adjust, Remote Lock-out, Air Spring	Hydraulic Compression, Rebound adjust, Lock-out, Air Spring
SYSTEM	OCR(R), Air(L)	
TRAVEL (mm)	27.5": 130, 140mm	
BRAKE TYPE	Disc Only	
WEIGHT (kgs) (w/ 200mm steerer)	1.89	1.87

* A: Air, R: Rebound, C: Compression, TRL: Remote Lock-out, L: Lock-out

REVEAL 29-15

MODEL	TRL	AIR
STEERER	28.6mm A7050 Aluminum (Optional 1.5" Aluminum tapered steerer)	
CROWN PITCH	130mm	
CROWN	Aluminum Black	
STANCHION	32mm A7050 Aluminum Hard Anodize Black	
CASTING	Magnesium 15mm QR	
ADJUSTMENT	A, R, TRL	A, R, L, C
FEATURES	Hydraulic Rebound adjust, Remote Lock-out, Air Spring	Hydraulic Compression, Rebound adjust, Lock-out, Air Spring
SYSTEM	OCRC(R), Air(L)	
TRAVEL (mm)	29": 80, 100, 120mm	
BRAKE TYPE	Disc Only	
WEIGHT (kgs) (w/ 200mm steerer)	1.82	1.80

* A: Air, R: Rebound, C: Compression, TRL: Remote Lock-out, L: Lock-out

REVEAL 29

MODEL	TRL	AIR
STEERER	28.6mm A7050 Aluminum (Optional 1.5" Aluminum tapered steerer)	
CROWN PITCH	130mm	
CROWN	Aluminum Black	
STANCHION	32mm A7050 Aluminum Hard Anodize Black	
CASTING	Magnesium 9mm Open Dropout	
ADJUSTMENT	A, R, TRL	A, R, L, C
FEATURES	Hydraulic Rebound adjust, Remote Lock-out, Air Spring	Hydraulic Compression, Rebound adjust, Lock-out, Air Spring
SYSTEM	OCRC(R), Air(L)	
TRAVEL (mm)	29": 80, 100, 120mm	
BRAKE TYPE	Disc Only	
WEIGHT (kgs) (w/ 200mm steerer)	1.63	1.61

* A: Air, R: Rebound, C: Compression, TRL: Remote Lock-out, L: Lock-out

www.rstsuspension.com

REVEAL 27.5-15

MODEL	TRL	AIR
STEERER	28.6mm A7050 Aluminum (Optional 1.5" Aluminum tapered steerer)	
CROWN PITCH	130mm	
CROWN	Aluminum Black	
STANCHION	32mm A7050 Aluminum Hard Anodize Black	
CASTING	Magnesium 15mm QR	
ADJUSTMENT	A, R, TRL	A, R, L, C
FEATURES	Hydraulic Rebound adjust, Remote Lock-out, Air Spring	Hydraulic Compression, Rebound adjust, Lock-out, Air Spring
SYSTEM	OCR+(R), Air(L)	
TRAVEL (mm)	27.5": 80, 100, 120 mm	
BRAKE TYPE	Disc Only	
WEIGHT (kgs) (w/ 200mm steerer)	1.78	1.76

* A: Air, R: Rebound, C: Compression, TRL: Remote Lock-out, L: Lock-out

REVEAL 27.5/26

MODEL	27.5 TRL	27.5 AIR	26 TRL	26 AIR
STEERER	28.6mm A7050 Aluminum (Optional 1.5" Aluminum tapered steerer)		28.6mm A7050 Aluminum (Optional 1.5" Aluminum tapered steerer)	
CROWN PITCH	130mm		130mm	
CROWN	Aluminum Black		Aluminum Black	
STANCHION	32mm A7050 Aluminum Hard Anodize Black		32mm A7050 Aluminum Hard Anodize Black	
CASTING	Magnesium 9mm Open Dropout		Magnesium 9mm Open Dropout	
ADJUSTMENT	A, R, TRL	A, R, L, C	A, R, TRL	A, R, L, C
FEATURES	Hydraulic Rebound adjust, Remote Lock-out, Air Spring	Hydraulic Compression, Rebound adjust, Lock-out, Air Spring	Hydraulic Rebound adjust, Remote Lock-out, Air Spring	Hydraulic Compression, Rebound adjust, Lock-out, Air Spring
SYSTEM	OCR+(R), Air(L)		OCRC(R), Air(L)	
TRAVEL (mm)	27.5": 80, 100, 120mm		26": 80, 100, 120mm	
BRAKE TYPE	Disc Only		Disc or Disc & V-brake	
WEIGHT (kgs) (w/ 200mm steerer)	1.65	1.63	1.53	1.51

* A: Air, R: Rebound, C: Compression, TRL: Remote Lock-out, L: Lock-out

F1 RST 29-15

MODEL	TRL	AIR
STEERER	28.6mm A7050 Aluminum (Optional 1.5" Aluminum tapered steerer)	
CROWN PITCH	130mm	
CROWN	Aluminum Black	
STANCHION	32mm A7050 Aluminum Hard Anodize Black	
CASTING	Magnesium 15mm QR	
ADJUSTMENT	A, R, TRL	A, R, L, C
FEATURES	Hydraulic Rebound adjust, Remote Lock-out, Air Spring	Hydraulic Compression, Rebound adjust, Lock-out, Air Spring
SYSTEM	OCR(R), Air(L)	
TRAVEL (mm)	29": 80, 100, 120mm	
BRAKE TYPE	Disc Only	
WEIGHT (kgs) (w/ 200mm steerer)	2.15	2.13

* A: Air, R: Rebound, C: Compression, TRL: Remote Lock-out, L: Lock-out

F1 RST 29

MODEL	TRL	AIR
STEERER	28.6mm A7050 Aluminum (Optional 1.5" Aluminum tapered steerer)	
CROWN PITCH	130mm	
CROWN	Aluminum Black	
STANCHION	32mm A7050 Aluminum Hard Anodize Black	
CASTING	Magnesium 9mm Open Dropout	
ADJUSTMENT	A, R, TRL	A, R, L, C
FEATURES	Hydraulic Rebound adjust, Remote Lock-out, Air Spring	Hydraulic Compression, Rebound adjust, Lock-out, Air Spring
SYSTEM	OCR(R), Air(L)	
TRAVEL (mm)	29": 80, 100, 120mm	
BRAKE TYPE	Disc Only	
WEIGHT (kgs) (w/ 200mm steerer)	1.96	1.94

* A: Air, R: Rebound, C: Compression, TRL: Remote Lock-out, L: Lock-out

www.rstsuspension.com

F1RST 27.5-15

MODEL	TRL	AIR
STEERER	28.6mm A7050 Aluminum (Optional 1.5" Aluminum tapered steerer)	
CROWN PITCH	130mm	
CROWN	Aluminum Black	
STANCHION	32mm A7050 Aluminum Hard Anodize Black	
CASTING	Magnesium 15mm QR	
ADJUSTMENT	A, R, TRL	A, R, L, C
FEATURES	Hydraulic Rebound adjust, Remote Lock-out, Air Spring	Hydraulic Compression, Rebound adjust, Lock-out, Air Spring
SYSTEM	OCR(R), Air(L)	
TRAVEL (mm)	27.5": 80, 100, 120mm	
BRAKE TYPE	Disc Only	
WEIGHT (kgs) (w/ 200mm steerer)	2.00	1.98

* A: Air, R: Rebound, C: Compression, TRL: Remote Lock-out, L: Lock-out

F1RST 27.5

MODEL	TRL	AIR
STEERER	28.6mm A7050 Aluminum (Optional 1.5" Aluminum tapered steerer)	
CROWN PITCH	130mm	
CROWN	Aluminum Black	
STANCHION	32mm A7050 Aluminum Hard Anodize Black	
CASTING	Magnesium 9mm Open Dropout	
ADJUSTMENT	A, R, TRL	A, R, L, C
FEATURES	Hydraulic Rebound adjust, Remote Lock-out, Air Spring	Hydraulic Compression, Rebound adjust, Lock-out, Air Spring
SYSTEM	OCR(R), Air(L)	
TRAVEL (mm)	27.5": 80, 100, 120mm	
BRAKE TYPE	Disc Only	
WEIGHT (kgs) (w/ 200mm steerer)	1.88	1.86

* A: Air, R: Rebound, C: Compression, TRL: Remote Lock-out, L: Lock-out

F1RST 26

MODEL	TRL	AIR
STEERER	28.6mm A7050 Aluminum (Optional 1.5" Aluminum tapered steerer)	
CROWN PITCH	130mm	
CROWN	Aluminum Black	
STANCHION	32mm A7050 Aluminum Hard Anodize Black	
CASTING	Magnesium 9mm Open Dropout	
ADJUSTMENT	A, R, TRL	A, R, L, C
FEATURES	Hydraulic Rebound adjust, Remote Lock-out, Air Spring	Hydraulic Compression, Rebound adjust, Lock-out, Air Spring
SYSTEM	OCR(R), Air(L)	
TRAVEL (mm)	26": 80, 100, 120mm	
BRAKE TYPE	Disc or Disc & V-brake	
WEIGHT (kgs) (w/ 200mm steerer)	1.82	1.80

* A: Air, R: Rebound, C: Compression, TRL: Remote Lock-out, L: Lock-out

F1RST PLATINUM 26

MODEL	TRL	AIR
STEERER	28.6mm A7050 Aluminum (Optional 1.5" Aluminum tapered steerer)	
CROWN PITCH	130mm	
CROWN	Aluminum Black	
STANCHION	30mm A7050 Aluminum Hard Anodize Black	
CASTING	Magnesium 9mm Open Dropout	
ADJUSTMENT	A, R, TRL	A, R, L, C
FEATURES	Hydraulic Rebound adjust, Remote Lock-out, Air Spring	Hydraulic Compression, Rebound adjust, Lock-out, Air Spring
SYSTEM	OCR(R), Air(L)	
TRAVEL (mm)	26": 80, 100mm	
BRAKE TYPE	Disc or D+V-brake	
WEIGHT (kgs) (w/ 200mm steerer)	1.52	1.50

* A: Air, R: Rebound, C: Compression, TRL: Remote Lock-out, L: Lock-out

www.rstsuspension.com

AERIAL 29-15

MODEL	RL ◆	TNL ◆	MLC
STEERER	28.6mm A7050 Aluminum (Optional 1.5" Aluminum tapered steerer)		
CROWN PITCH	130mm		
CROWN	Aluminum Black		
STANCHION	32mm Steel QPQ Black		
CASTING	Magnesium 15mm QR		
ADJUSTMENT	A, RL	A, L	A, L
FEATURES	Hydraulic Remote Lock-out, Air Spring	Hydraulic Lock-out, Air Spring	Mechanical Lock-out, Air Spring
SYSTEM	Oil(R), Air(L)		Air(L)
TRAVEL (mm)	29": 80, 100, 120mm		
BRAKE TYPE	Disc Only		
WEIGHT (kgs) (w/ 200mm steerer)	2.34	2.28	2.05

* A: Air, R: Rebound, RL: Remote Lock-out, L: Lock-out
◆ Fixed rebound option

AERIAL 29R/ 29

MODEL	RL-R	TNL-R	RL ◆	TNL ◆	MLC
STEERER	28.6mm A7050 Aluminum (Optional 1.5" Aluminum tapered steerer)				
CROWN PITCH	130mm				
CROWN	Aluminum Black				
STANCHION	32mm Steel QPQ black				
CASTING	Magnesium 9mm Open Dropout				
ADJUSTMENT	A, R, RL	A, R, L	A, RL	A, L	A, L
FEATURES	Hydraulic Rebound Adjust, Remote Lock-out, Air Spring	Hydraulic Rebound Adjust, Lock-out, Air Spring	Hydraulic Remote Lock-out, Air Spring	Hydraulic Lock-out, Air Spring	Mechanical Lock-out, Air Spring
SYSTEM	Oil(R), Air(L)				Air(L)
TRAVEL (mm)	29": 80, 100, 120mm				
BRAKE TYPE	Disc Only				
WEIGHT (kgs) (w/ 200mm steerer)	2.40	2.34	2.34	2.28	2.05

* A: Air, R: Rebound, RL: Remote Lock-out, L: Lock-out
◆ Fixed rebound option

www.rstsuspension.com

AERIAL 27.5R/ 27.5

MODEL	RL-R	TNL-R	RL ◆	TNL ◆	MLC
STEERER	28.6mm A7050 Aluminum (Optional 1.5" Aluminum tapered steerer)				
CROWN PITCH	130mm				
CROWN	Aluminum Black				
STANCHION	32mm Steel QPQ black				
CASTING	Magnesium 9mm Open Dropout				
ADJUSTMENT	A, R, RL	A, R, L	A, RL	A, L	A, L
FEATURES	Hydraulic Rebound Adjust Remote Lock-out, Air Spring	Hydraulic Rebound Adjust Lock-out, Air Spring	Hydraulic Remote Lock-out, Air Spring	Hydraulic Lock-out, Air Spring	Mechanical Lock-out, Air Spring
SYSTEM	Oil(R), Air(L)				Air(L)
TRAVEL (mm)	27.5": 80, 100, 120mm				
BRAKE TYPE	Disc Only				
WEIGHT (kgs) (w/ 200mm steerer)	2.42	2.36	2.26	2.20	2.00

* A: Air, R: Rebound, RL: Remote Lock-out, L: Lock-out
◆ Fixed rebound option

AERIAL 26R/ 26

MODEL	RL-R	TNL-R	RL ◆	TNL ◆	MLC
STEERER	28.6mm A7050 Aluminum (Optional 1.5" Aluminum tapered steerer)				
CROWN PITCH	130mm				
CROWN	Aluminum Black				
STANCHION	32mm Steel QPQ black				
CASTING	Magnesium 9mm Open Dropout				
ADJUSTMENT	A, R, RL	A, R, L	A, RL	A, L	A, L
FEATURES	Hydraulic Rebound Adjust Remote Lock-out, Air Spring	Hydraulic Rebound Adjust Lock-out, Air Spring	Hydraulic Remote Lock-out, Air Spring	Hydraulic Lock-out, Air Spring	Mechanical Lock-out, Air Spring
SYSTEM	Oil(R), Air(L)				Air(L)
TRAVEL (mm)	26": 80, 100, 120mm				
BRAKE TYPE	Disc or Disc & V-brake				
WEIGHT (kgs) (w/ 200mm steerer)	2.37	2.31	2.31	2.25	2.02

* A: Air, R: Rebound, RL: Remote Lock-out, L: Lock-out
◆ Fixed rebound option

OMEGA 29

MODEL	RA	RL ◆	TNL ◆	MLC	T
STEERER	28.6mm Steel (Optional 1.5" Steel tapered steerer)				
CROWN PITCH	130mm				
CROWN	Aluminum Black				
STANCHION	32mm Steel CP Finish				
CASTING	Magnesium 9mm Open Dropout				
ADJUSTMENT	R,P (easy preload)	RL, P (easy preload)	L, P (easy preload)	L, P (easy preload)	P (easy preload)
FEATURES	Hydraulic Rebound adjust	Hydraulic Remote Lock-Out	Hydraulic Lock-Out	Mechanical Lock-Out	-
SYSTEM	Oil(R), Coil(L)			Coil	
TRAVEL (mm)	29": 80, 100, 120mm				
BRAKE TYPE	Disc Only				
WEIGHT (kgs) (w/ 200mm steerer)	2.44	2.55	2.47	2.24	2.24

* RL: Remote Lock-out, L: Lock-out, P: Preload, R: Rebound
◆ Fixed rebound option

OMEGA 27.5

MODEL	RA	RL ◆	TNL ◆	MLC	T
STEERER	28.6mm Steel (Optional 1.5" Steel tapered steerer)				
CROWN PITCH	130mm				
CROWN	Aluminum Black				
STANCHION	32mm Steel CP Finish				
CASTING	Magnesium 9mm Open Dropout				
ADJUSTMENT	R,P (easy preload)	RL, P (easy preload)	L, P (easy preload)	L, P (easy preload)	P (easy preload)
FEATURES	Hydraulic Rebound adjust	Hydraulic Remote Lock-Out	Hydraulic Lock-Out	Mechanical Lock-Out	-
SYSTEM	Oil(R), Coil(L)			Coil	
TRAVEL (mm)	27.5": 80, 100, 120mm				
BRAKE TYPE	Disc Only				
WEIGHT (kgs) (w/ 200mm steerer)	2.27	2.36	2.30	2.07	2.07

* RL: Remote Lock-out, L: Lock-out, P: Preload
◆ Fixed rebound option

OMEGA 26

MODEL	RA	RL ◆	TNL ◆	MLC	T
STEERER	28.6mm Steel (Optional 1.5" Steel tapered steerer)				
CROWN PITCH	130mm				
CROWN	Aluminum Black				
STANCHION	30mm Steel CP Finish				
CASTING	Magnesium 9mm Open Dropout				
ADJUSTMENT	R,P (easy preload)	RL, P (easy preload)	L, P (easy preload)	L, P (easy preload)	P (easy preload)
FEATURES	Hydraulic Rebound adjust	Hydraulic Remote Lock-Out	Hydraulic Lock-Out	Mechanical Lock-Out	-
SYSTEM	Oil(R), Coil(L)			Coil	
TRAVEL (mm)	26": 80, 100, 120mm				
BRAKE TYPE	Disc or Disc & V-brake				
WEIGHT (kgs) (w/ 200mm steerer)	2.34	2.44	2.37	2.11	2.11

* RL: Remote Lock-out, L: Lock-out, P: Preload
◆ Fixed rebound option

BLAZE 29

MODEL	RA	RL ◆	TNL ◆	MLC	T
STEERER	28.6mm Steel (Optional 1.5" Steel tapered steerer)				
CROWN PITCH	130mm				
CROWN	Aluminum Black				
STANCHION	30mm Steel CP Finish				
CASTING	Aluminum 9mm Open Dropout				
ADJUSTMENT	R,P	RL, P	L, P	L, P	P
FEATURES	Hydraulic Rebound adjust	Hydraulic Remote Lock-Out	Hydraulic Lock-Out	Mechanical Lock-Out	-
SYSTEM	Oil(R), Coil(L)			Coil	
TRAVEL (mm)	29": 80, 100, 120mm				
BRAKE TYPE	Disc Only				
WEIGHT (kgs) (w/ 200mm steerer)	2.81	2.9	2.84	2.61	2.61

* RL: Remote Lock-out, L: Lock-out, P: Preload
◆ Fixed rebound option

BLAZE 27.5

MODEL	RA	RL ◆	TNL ◆	MLC	T
STEERER	28.6mm Steel				
CROWN PITCH	130mm				
CROWN	Aluminum Black				
STANCHION	30mm Steel CP Finish				
CASTING	Aluminum 9mm Open Dropout				
ADJUSTMENT	R,P	RL, P	L, P	L, P	P
FEATURES	Hydraulic Rebound adjust	Hydraulic Remote Lock-Out	Hydraulic Lock-Out	Mechanical Lock-Out	-
SYSTEM	Oil(R), Coil(L)			Coil	
TRAVEL (mm)	27.5": 80, 100, 120, 130mm				
BRAKE TYPE	Disc Only				
WEIGHT (kgs) (w/ 200mm steerer)	2.73	2.82	2.76	2.51	2.55

* RL: Remote Lock-out, L: Lock-out, P: Preload
◆ Fixed rebound option

www.rstsuspension.com

GILA 29

MODEL	RL ◆	TNL ◆	MLC	T
STEERER	28.6mm Steel			
CROWN PITCH	130mm			
CROWN	Aluminum Black			
STANCHION	28.6mm Steel CP Finish			
CASTING	Aluminum 9mm Open Dropout			
ADJUSTMENT	RL, P	L, P	L, P	P
FEATURES	Hydraulic Remote Lock-Out	Hydraulic Lock-Out	Mechanical Lock-Out	–
SYSTEM	Oil(R), Coil(L)		Coil	
TRAVEL (mm)	29": 80, 100, 120mm			
BRAKE TYPE	Disc Only		Coil	
WEIGHT (kgs) (w/ 200mm steerer)	2.70	2.64	2.41	2.36

* RL: Remote Lock-out, L: Lock-out, P: Preload
◆ Fixed rebound option

GILA 27.5

MODEL	RL ◆	TNL ◆	MLC	T
STEERER	28.6mm Steel			
CROWN PITCH	125mm			
CROWN	Aluminum Black			
STANCHION	28.6mm Steel CP Finish			
CASTING	Aluminum 9mm Open Dropout			
ADJUSTMENT	RL, P	L, P	L, P	P
FEATURES	Hydraulic Remote Lock-Out	Hydraulic Lock-Out	Mechanical Lock-Out	–
SYSTEM	Oil(R), Coil(L)		Coil	
TRAVEL (mm)	27.5": 80, 100mm			
BRAKE TYPE	Disc or Disc & V-brake			
WEIGHT (kgs) (w/ 200mm steerer)	2.50	2.44	2.19	2.14

* RL: Remote Lock-out, L: Lock-out, P: Preload
◆ Fixed rebound option

GILA 26

MODEL	RL ◆	TNL ◆	MLC	T
STEERER	28.6mm Steel			
CROWN PITCH	125mm			
CROWN	Aluminum Black			
STANCHION	28.6mm Steel CP Finish			
CASTING	Aluminum 9mm Open Dropout			
ADJUSTMENT	RL, P	L, P	L, P	P
FEATURES	Hydraulic Remote Lock-Out	Hydraulic Lock-Out	Mechanical Lock-Out	–
SYSTEM	Oil(R), Coil(L)			
TRAVEL (mm)	26": 80, 100mm			
BRAKE TYPE	Disc or Disc & V-brake			
WEIGHT (kgs) (w/ 200mm steerer)	2.41	2.35	2.10	2.05

* RL: Remote Lock-out, L: Lock-out, P: Preload
◆ Fixed rebound option

ANGEL 26

MODEL	RL ◆	TNL ◆	ML	T
STEERER	28.6mm Steel			
CROWN PITCH	112mm			
CROWN	Aluminum Black Coating			
STANCHION	28.6mm Steel CP Finish			
CASTING	Magnesium 9mm Open Dropout			
ADJUSTMENT	RL, P	L, P	L, P	P
FEATURES	Hydraulic Remote Lock-Out	Hydraulic Lock-Out	Mechanical Lock-Out	–
SYSTEM	Oil(R), Coil(L)		Coil(L)	
TRAVEL (mm)	26": 60, 75 mm			
BRAKE TYPE	Disc or Disc & V-brake			
WEIGHT (kgs) (w/ 200mm steerer)	2.22	2.16	2.11	2.05

* RL: Remote Lock-out, L: Lock-out, P: Preload
◆ Fixed rebound option

ALEX 26

MODEL	RL ◆	TNL ◆	MLC	T
STEERER	28.6mm Steel			
CROWN PITCH	125mm			
CROWN	Aluminum Black			
STANCHION	30mm Steel CP Finish			
CASTING	Aluminum 9mm Open Dropout			
ADJUSTMENT	RL, P	L, P	L, P	P
FEATURES	Hydraulic Remote Lock-Out	Hydraulic Lock-Out	Mechanical Lock-Out	–
SYSTEM	Oil(R), Coil(L)		Coil	
TRAVEL (mm)	26": 80, 100 mm			
BRAKE TYPE	Disc Only			
WEIGHT (kgs) (w/ 200mm steerer)	2.82	2.76	2.51	2.55

* RL: Remote Lock-out, L: Lock-out, P: Preload
◆ Fixed rebound option

www.rstsuspension.com

CAPA 29

MODEL	MLC	T
STEERER	28.6mm Steel	
CROWN PITCH	125mm	
CROWN	Aluminum Black	
STANCHION	25.4mm Steel CP Finish	
CASTING	Aluminum 9mm Open Dropout	
ADJUSTMENT	L, P	P
FEATURES	Mechanical Lock-Out	–
SYSTEM	Coil	
TRAVEL (mm)	29": 60, 80mm	
BRAKE TYPE	Disc or Disc & V-brake	
WEIGHT (kgs) (w/ 200mm steerer)	2.03	1.98

* L: Lock-out, P: Preload

CAPA 27.5

MODEL	MLC	T
STEERER	28.6mm Steel	
CROWN PITCH	125mm	
CROWN	Aluminum Black	
STANCHION	25.4mm Steel CP Finish	
CASTING	Aluminum 9mm Open Dropout	
ADJUSTMENT	L, P	P
FEATURES	Mechanical Lock-Out	–
SYSTEM	Coil	
TRAVEL (mm)	27.5": 60, 80mm	
BRAKE TYPE	Disc or Disc & V-brake	
WEIGHT (kgs) (w/ 200mm steerer)	2.03	1.98

* L: Lock-out, P: Preload

CAPA 26

MODEL	MLC	T
STEERER	28.6 / 25.4mm Steel	
CROWN PITCH	120mm	
CROWN	Aluminum Black	
STANCHION	25.4mm Steel CP Finish	
CASTING	Aluminum 9mm Open Dropout	
ADJUSTMENT	L, P	P
FEATURES	Mechanical Lock-Out	–
SYSTEM	Coil	
TRAVEL (mm)	26": 80mm	
BRAKE TYPE	Disc or Disc & V-brake	
WEIGHT (kgs) (w/ 200mm steerer)	2.03	1.98

* L: Lock-out, P: Preload

STEM SHOCK

MODEL	
Adjustable angle	+4°, 0°, -4°
Travel	20mm
Features	Angle adjust spacer option for the stem
Diameter	fit into inner diameter ≥24.5mm steerer
Length	Suspension system will add 50mm of height to the steer tube
Weight (kgs)	0.38

JUNIOR
MAXXIS
100%

SPEX 20-15/9

NEW

MODEL	15 TRL	15 AIR	9 TRL	9 AIR
STEERER	28.6mm A7050 Aluminum			
CROWN PITCH	125mm			
CROWN	Aluminum Black			
STANCHION	30mm A7050 Aluminum Hard Anodize Black			
CASTING	Magnesium 15mm Blot Axle		Magnesium 9mm Open Dropout	
ADJUSTMENT	A, R, TRL	A, R, L, C	A, R, TRL	A, R, L, C
FEATURES	Hydraulic Rebound adjust, Remote Lock-out, Air Spring	Hydraulic Compression, Rebound adjust, Lock-out, Air Spring	Hydraulic Rebound adjust, Remote Lock-out, Air Spring	Hydraulic Compression, Rebound adjust, Lock-out, Air Spring
SYSTEM	OCR(R), Air(L)			
TRAVEL (mm)	20": 60, 80mm			
BRAKE TYPE	Disc or Disc & V-brake			
WEIGHT (kgs) (w/ 200mm steerer)	1.75	1.7	1.7	1.65

*A: Air, R: Rebound, C: Compression, TRL: Remote Lock-out, L: Lock-out

www.rstsuspension.com

SNYPER 24

MODEL	TRL	AIR
STEERER	28.6mm A7050 Aluminum (Optional 1.5" Aluminum tapered steerer)	
CROWN PITCH	130mm	
CROWN	Aluminum Black	
STANCHION	32mm A7050 Aluminum Hard Anodize Black	
CASTING	Magnesium 9mm Open Dropout	
ADJUSTMENT	A, R, TRL	A, R, L, C
FEATURES	Hydraulic Rebound adjust Remote Lock-out, Air Spring	Hydraulic Compression, Rebound adjust, Lock-out, Air Spring
SYSTEM	OCR(R), Air(L)	
TRAVEL (mm)	24": 60, 70, 80, 100, 120mm	
BRAKE TYPE	Disc Only	
WEIGHT (kgs) (w/ 200mm steerer)	1.87	1.85

* A: Air, R: Rebound, C: Compression, TRL: Remote Lock-out, L: Lock-out

F1RST 24-15

MODEL	TRL	AIR
STEERER	28.6mm 7050 Aluminum (Optional 1.5"Aluminum tapered steerer)	
CROWN PITCH	130mm	
CROWN	Aluminum Black	
STANCHION	30mm 7050 Aluminum Hard Anodize Black	
CASTING	Magnesium 15mm QR	
ADJUSTMENT	A, R, TRL	A, R, L, C
FEATURES	Hydraulic Rebound adjust Remote Lock-out, Air Spring	Hydraulic Compression, Rebound adjust, Lock-out, Air Spring
SYSTEM	OCR(R), Air(L)	
TRAVEL (mm)	24": 80, 100, 120mm	
BRAKE TYPE	Disc Only	
WEIGHT (kgs) (w/ 200mm steerer)	1.92	1.90

* A: Air, R: Rebound, C: Compression, TRL: Remote Lock-out, L: Lock-out

F1RST 24

MODEL	TRL	AIR
STEERER	28.6mm A7050 Aluminum	
CROWN PITCH	125mm	
CROWN	Aluminum Black	
STANCHION	28.6mm A7050 Aluminum Hard Anodize Black	
CASTING	Magnesium 9mm Open Dropout	
ADJUSTMENT	A, R, TRL	A, R, L, C
FEATURES	Hydraulic Rebound adjust, Remote Lock-out, Air Spring	Hydraulic Compression, Rebound adjust, Lock-out, Air Spring
SYSTEM	OCR(R), Air(L)	
TRAVEL (mm)	24": 60mm	
BRAKE TYPE	Disc Only	
WEIGHT (kgs) (w/ 200mm steerer)	1.62	1.60

* A: Air, R: Rebound, C: Compression, TRL: Remote Lock-out, L: Lock-out

AERIAL 24

MODEL	RL ◆	TNL ◆	MLC
STEERER	28.6mm A7050 Aluminum		
CROWN PITCH	125mm		
CROWN	Aluminum Black		
STANCHION	28.6mm Steel QPQ black		
CASTING	Magnesium 9mm Open Dropout		
ADJUSTMENT	A, RL	A, L	A, L
FEATURES	Hydraulic Remote Lock-out, Air Spring	Hydraulic Lock-out, Air Spring	Mechanical Lock-out,Air Spring
SYSTEM	Oil(R), Air(L)		Air
TRAVEL (mm)	24": 60mm		
BRAKE TYPE	Disc Only		
WEIGHT (kgs) (w/ 200mm steerer)	1.99	1.93	1.73

* A: Air, RL: Remote Lock-out, L: Lock-out
◆ Fixed rebound option

www.rstsuspension.com

CAPA 24/20

MODEL	MLC 24	T24	T20
STEERER	28.6 / 25.4mm Steel		
CROWN PITCH	120mm		
CROWN	Aluminum Black		
STANCHION	25.4mm Steel CP Finish		
CASTING	Aluminum 9mm Open Dropout		
ADJUSTMENT	L, P	P	P
FEATURES	Mechanical Lock-Out	–	–
SYSTEM	Coil		
TRAVEL (mm)	24": 50mm	24": 30, 50mm	20": 30, 50mm
BRAKE TYPE	Disc or Disc & V-brake		
WEIGHT (kgs) (w/ 200mm steerer)	1.93	1.84	1.75

* L: Lock-out, P: Preload

CARGO

PORTER 20-15/9

NEW

MODEL	15 T	9T
STEERER	28.6mm A7050 Aluminum	
CROWN PITCH	125mm	
CROWN	Aluminum Black	
STANCHION	30mm Steel CP Finsh	
CASTING	Magnesium 15mm Blot Axle	Magnesium 9mm Open Dropout
ADJUSTMENT	P	P
FEATURES	–	–
SYSTEM	Coil	
TRAVEL (mm)	20": 60, 80mm	
BRAKE TYPE	Disc or Disc & V-brake	
WEIGHT (kgs) (w/ 200mm steerer)	2.14	2.09

*P: Preload

GARY 20

MODEL	20 T
STEERER	28.6mm Steel
CROWN PITCH	125mm
CROWN	Aluminum Black Coating
STANCHION	28.6mm Steel CP Finish
CASTING	Aluminum 9mm Open Dropout
ADJUSTMENT	P
FEATURES	–
SYSTEM	Coil
TRAVEL (mm)	20": 50mm
BRAKE TYPE	Disc & V-brake
WEIGHT (kgs) (w/ 200mm steerer)	2.17

* P: Preload

DIRT JUMP

The fork series for DIRT riders - Increased durability and ready for air time. Tough, short travel design combined with a top performing damping system make for forks ready to take on the toughest lines on the planet.

SPACE 26

MODEL	Jump	Free
STEERER	28.6mm A7050 Aluminum	28.6mm Cr-Mo Steel
CROWN PITCH	138mm	
CROWN	Aluminum Black	
STANCHION	36mm A7050 Aluminum Hard Anodize Black	36mm Steel QPQ black
CASTING	Magnesium 20mm Bolt Axle	
ADJUSTMENT	A, R	R
FEATURES	Hydraulic Rebound adjust, Air Spring	Hydraulic Rebound adjust
SYSTEM	Oil(R), Air(L)	Oil(R), Coil(L)
TRAVEL (mm)	26": 80, 100mm	
BRAKE TYPE	Disc Only	
WEIGHT (kgs) (w/ 200mm steerer)	2.63	2.93

* A: Air, R: Rebound

SLOPE 27.5/26

MODEL	
STEERER	28.6mm A7050 Aluminum (Optional 1.5" Aluminum tapered steerer)
CROWN PITCH	130mm
CROWN	Aluminum Black
STANCHION	34mm A7050 Aluminum Hard Anodize Black
CASTING	Magnesium 15mm QR
ADJUSTMENT	A, R, C
FEATURES	Hydraulic Compression, Rebound adjust, Air Spring
SYSTEM	OCR+(R), Air(L)
TRAVEL (mm)	26"/27.5": 80, 100, 130mm
BRAKE TYPE	Disc Only
WEIGHT (kgs) (w/ 200mm steerer)	27.5": 2.00 26": 1.98

* A: Air, R: Rebound, C: Compression

DIRT-15/9

NEW

MODEL	15 RA	15 T	9 RA	9 T
STEERER	28.6mm Cr-Mo Steel			
CROWN PITCH	130mm			
CROWN	Aluminum Black			
STANCHION	32mm Steel CP Finish			
CASTING	Aluminum 15mm Bolt Axle		Aluminum 9mm Open Dropout	
ADJUSTMENT	R, P	P	R, P	P
FEATURES	Hydraulic Rebound adjust	–	Hydraulic Rebound adjust	–
SYSTEM	Oil(R), Coil(L)	Coil	Oil(R), Coil(L)	Coil
TRAVEL (mm)	26": 80, 100, 130mm			
BRAKE TYPE	Disc or Disc & V-brake			
WEIGHT (kgs) (w/ 200mm steerer)	3.06	3.11	3.01	3.05

* R: Rebound, P: Preload

www.rstsuspension.com

CROSS TREKKING

Comfortable forks for touring and city bikes with travel around 50mm. Efficient suspension forks that include mounting options that allow use of integrated lights, fenders, dynamos and even roller brake use. Carefree technical systems allow convenient daily use.

VOGUE

MODEL	TRL	Air
STEERER	28.6mm A7050 Aluminum (Optional 1.5" Aluminum tapered steerer)	
CROWN PITCH	120mm	
CROWN	Aluminum Black	
STANCHION	28.6mm A7050 Aluminum Hard Anodize Black	
CASTING	Magnesium 9mm Open Dropout	
ADJUSTMENT	A, R, TRL	A, R, L, C
FEATURES	Hydraulic Rebound adjust, Remote Lock-out, Air Spring	Hydraulic Compression, Rebound adjust, Lock-out, Air Spring
SYSTEM	OCR(R), Air(L)	
TRAVEL (mm)	700C: 50, 60, 80mm	
BRAKE TYPE	Disc or Disc & V-brake	
WEIGHT (kgs) (w/ 200mm steerer)	1.80	1.78

* A: Air, R: Rebound, C: Compression, TRL: Remote Lock-out, L: Lock-out

www.rstsuspension.com

VIV Air

MODEL	RL ◆	TNL ◆
STEERER	28.6mm A7050 Aluminum (Optional 1.5" Aluminum tapered steerer)	
CROWN PITCH	120mm	
CROWN	Aluminum Black	
STANCHION	28.6mm Steel QPQ Black	
CASTING	Magnesium 9mm Open Dropout	
ADJUSTMENT	A, RL	A, L
FEATURES	Hydraulic Remote Lock-out, Air Spring	Hydraulic Lock-out, Air Spring
SYSTEM	Oil(R), Air(L)	
TRAVEL (mm)	700C: 50, 60, 80mm	
BRAKE TYPE	Disc or Disc & V-brake	
WEIGHT (kgs) (w/ 200mm steerer)	2.23	2.17

* A: Air, RL: Remote Lock-out, L: Lock-out
◆ Fixed rebound option

VOLANT 15 & 9

MODEL	RL ◆	TNL ◆	MLC	T
STEERER	28.6mm Steel (Optional 1.5" Steel tapered steerer or 1.5" Aluminum tapered steerer)			
CROWN PITCH	130mm			
CROWN	Aluminum Black			
STANCHION	30mm Steel CP Finish			
CASTING	Aluminum 15mm Blot Axle / Aluminum 9mm Open Dropout			
ADJUSTMENT	RL, P	L, P	L, P	P
FEATURES	Hydraulic Remote Lock-Out	Hydraulic Lock-Out	Mechanical Lock-Out	–
SYSTEM	Oil(R), Coil(L)		Coil	
TRAVEL (mm)	700C: 50, 60, 80mm			
BRAKE TYPE	Disc or Disc & V-brake			
WEIGHT (kgs) (w/ 200mm steerer)	15: 2.85 9: 2.80	15: 2.79 9: 2.74	15: 2.56 9: 2.51	15: 2.56 9: 2.51

* A: Air, L: Lock-out, P: Preload
◆ Fixed rebound option

VITA

MODEL	RL ◆	TNL ◆	MLC	T
STEERER	28.6mm Steel (Optional 1.5" Steel tapered steerer)			
CROWN PITCH	120mm			
CROWN	Aluminum Black			
STANCHION	28.6mm Steel CP Finish			
CASTING	Magnesium 9mm Open Dropout			
ADJUSTMENT	RL, P (easy preload)	L, P (easy preload)	L, P (easy preload)	P (easy preload)
FEATURES	Hydraulic Remote Lock-Out	Hydraulic Lock-Out	Mechanical Lock-Out	–
SYSTEM	Oil(R), Coil(L)		Coil	
TRAVEL (mm)	700C: 50, 60, 80mm			
BRAKE TYPE	Disc or Disc & V-brake			
WEIGHT (kgs) (w/ 200mm steerer)	2.41	2.35	2.13	2.13

* RL: Remote Lock-out, L: Lock-out, P: Preload
◆ Fixed rebound option

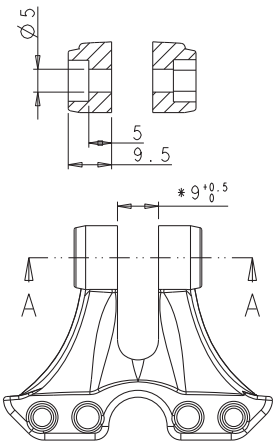

#M5GACC0921(M5*1.0)

#M5GACC0921 for TRELOCK and BASTA using

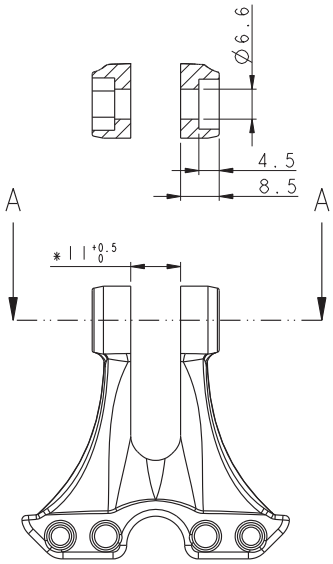

#M5GACX0109-01(M6*1.0)

#M5GACX0109-01 for BUMM using

POST LIGHTING SYSTEM INFO.

Front Light Maker	RST Bracket Part	Available Model
BUMM	M5GACX0109-01 (using M6 Screw)	LUMOTEC Classic LUMOTEC Lyt B LUMOTEC LYT LUMOTEC IQ Fly(T) LUMOTEC IQ Cyo(T) LUMOTEC rund LUMOTEC Retro LUMOTEC oval
BASTA	M5GACC0921 (using M5Screw)	Sprint
TRELOCK	M5GACC0921 (using M5 Screw)	LS 850 series / LS 870series / Bird series

NOVA

MODEL	RL ◆	TNL ◆	MLC	T
STEERER	28.6mm Steel (Optional 1.5" Steel tapered steerer)			
CROWN PITCH	112mm			
CROWN	Aluminum Black			
STANCHION	28.6mm Steel CP Finish			
CASTING	Aluminum 9mm Open Dropout			
ADJUSTMENT	RL, P	L, P	L, P	P
FEATURES	Hydraulic Remote Lock-Out	Hydraulic Lock-Out	Mechanical Lock-Out	–
SYSTEM	Oil(R), Coil(L)		Coil	
TRAVEL (mm)	700C: 50, 60mm			
BRAKE TYPE	Disc or Disc & V-brake			
WEIGHT (kgs) (w/ 200mm steerer)	2.62	2.56	2.35	2.36

* RL: Remote Lock-out, L: Lock-out, P: Preload
◆ Fixed rebound option

NEON PLS

MODEL	RL ◆	TNL ◆	MLC	T
STEERER	28.6mm Steel (Optional 1.5" Steel tapered steerer)			
CROWN PITCH	112mm			
CROWN	Aluminum Black			
STANCHION	28.6mm Steel CP Finish			
CASTING	Aluminum 9mm Open Dropout			
ADJUSTMENT	RL, P	L, P	L, P	P
FEATURES	Hydraulic Remote Lock-Out	Hydraulic Lock-Out	Mechanical Lock-Out	–
SYSTEM	Oil(R), Coil(L)		Coil	
TRAVEL (mm)	700C: 50, 60mm			
BRAKE TYPE	Disc or Disc & V-brake			
WEIGHT (kgs) (w/ 200mm steerer)	2.62	2.56	2.35	2.36

* RL: Remote Lock-out, L: Lock-out, P: Preload
* NEON PLS suitable for front motor use
◆ Fixed rebound option

VERSE

MODEL	RL ◆	TNL ◆	MLC	T
STEERER	28.6 / 25.4mm Steel			
CROWN PITCH	112mm			
CROWN	Aluminum Black			
STANCHION	28.6mm Steel CP Finish			
CASTING	Aluminum 9mm Open Dropout			
ADJUSTMENT	RL, P	L, P	L, P	P
FEATURES	Hydraulic Remote Lock-Out	Hydraulic Lock-Out	Mechanical Lock-Out	–
SYSTEM	Oil(R), Coil(L)		Coil	
TRAVEL (mm)	700C: 40, 50mm			
BRAKE TYPE	V-brake only			
WEIGHT (kgs) (w/ 200mm steerer)	2.57	2.51	2.30	2.31

* RL: Remote Lock-out, L: Lock-out, P: Preload
◆ Fixed rebound option

NEON

MODEL	RL ◆	TNL ◆	MLC	T
STEERER	28.6 / 25.4mm Steel			
CROWN PITCH	112mm			
CROWN	Aluminum Black			
STANCHION	25.4mm Steel CP Finish			
CASTING	Aluminum 9mm Open Dropout			
ADJUSTMENT	RL, P	L, P	L, P	P
FEATURES	Hydraulic Remote Lock-Out	Hydraulic Lock-Out	Mechanical Lock-Out	–
SYSTEM	Oil(R), Coil(L)		Coil	
TRAVEL (mm)	700C: 50, 60mm			
BRAKE TYPE	Disc or Disc & V-brake			
WEIGHT (kgs) (w/ 200mm steerer)	2.17	2.11	1.95	1.94

* RL: Remote Lock-out, L: Lock-out, P: Preload
◆ Fixed rebound option

URBAN

MODEL	RL ◆	TNL ◆	MLC	T
STEERER	28.6 / 25.4mm Steel			
CROWN PITCH	112mm			
CROWN	Aluminum Black			
STANCHION	25.4mm Steel CP Finish			
CASTING	Aluminum 9mm Open Dropout			
ADJUSTMENT	RL, P	L, P	L, P	P
FEATURES	Hydraulic Remote Lock-Out	Hydraulic Lock-Out	Mechanical Lock-Out	–
SYSTEM	Oil(R), Coil(L)		Coil	
TRAVEL (mm)	700C: 40mm			
BRAKE TYPE	Roller& Disc brake only, No V-brake available			
WEIGHT (kgs) (w/ 200mm steerer)	2.13	2.07	1.86	1.87

* RL: Remote Lock-out, L: Lock-out, P: Preload
◆ Fixed rebound option

SS-A7

MODEL	SS-A7 T	SS-A7
WHEEL SIZE	700 x 50C	
TRAVEL (mm)	30mm	35mm
FEATURES	Alu. Blade Spring Preload	Alu. Blade
STEERER	28.6mm A7050 Aluminum (Optional 1.5" Aluminum tapered steerer) (Min. Length: 210mm for T version & 210mm for w/o T version)	
LOWER	Aluminum 9mm Open Dropout	
BRAKE TYPE	Disc or Disc + V-brake (Optional Roller Mount)	
WEIGHT (kgs) (w/ 200mm steerer)	1.70	1.70

* SS A7 T / SS A7 suitable for E-BIKE and Pedelec

SS-A4 & A2

MODEL	SS-A4 T	SS-A4	SS-A2-100	SS-A2-75
WHEEL SIZE	24"		20"	
TRAVEL (mm)	30mm	35mm	30mm	30mm
FEATURES	Alu. Blade Spring Preload	Alu. Blade	Alu. Blade (Straight)	Alu. Blade (Curve)
STEERER	28.6mm A7050 Aluminum (Min. Length: 210mm for T version & 210mm for w/o T version)			
LOWER	Aluminum 9mm Open Dropout			
BRAKE TYPE	Disc + V-brake			V-brake
WEIGHT (kgs) (w/ 200mm steerer)	1.45	1.45	1.32	1.28

* SS A4 / SS A2-100 / SS A2-75 Suitable for E-BIKE and Pedelec
* SS A4 T recommend for Pedelec only

SS-M7 & M6

MODEL	SS-M7 T	SS-M7	SS-M6 T	SS-M6
WHEEL SIZE	700C		26"	
TRAVEL (mm)	30mm	35mm	30mm	35mm
FEATURES	Mag. Blade Spring Preload	Mag. Blade	Mag. Blade Spring Preload	Mag. Blade
STEERER	28.6mm A7050 Aluminum (Min. Length: 210mm for T version & 210mm for w/o T version)			
LOWER	Magnesium 9mm Open Dropout			
BRAKE TYPE	Disc + V-brake (Optional Roller Mount)			
WEIGHT (kgs) (w/ 200mm steerer)	1.33	1.33	1.18	1.18

www.rstsuspension.com

E-BIKE

Electrically power assisted bikes will change our traditional image of a bicycle regarding commuting, traveling, even vacation. They will bring us to work. Everyone can enjoy their trip with physical limitation.

TESTING STANDARD OF E-CITY&E-TREKKING

EN15194: 2017 Cycles - Electrically power assisted cycles - EPAC Bicycles

PULSE 29-15

MODEL	Air-RL ◆	Air-TNL ◆
STEERER	1.5" Steel tapered steerer (Optional 1.5" Aluminum tapered steerer)	
CROWN PITCH	130mm	
CROWN	Aluminum Black	
STANCHION	32mm Steel QPQ Black	
CASTING	Magnesium 15mm QR	
ADJUSTMENT	A, RL	A, L
FEATURES	Hydraulic Remote Lock-out, Air Spring	Hydraulic Lock-out, Air Spring
SYSTEM	Oil(R), Air(L)	
TRAVEL (mm)	29": 50, 60mm	
BRAKE TYPE	Disc Only	
WEIGHT (kgs) (w/ 200mm steerer)	2.69	2.63

* A: Air, RL: Remote Lock-out, L: Lock-out
* With Standard Fender Mount Baracket
◆ Fixed rebound option

PULSE 29 AIR/COIL

MODEL	Air-RL ◆	Air-TNL ◆	RL ◆	TNL ◆
STEERER	28.6mm Steel (Optional 1.5" Steel tapered steerer)			
CROWN PITCH	130mm			
CROWN	Aluminum Black			
STANCHION	30mm Steel QPQ Black			
CASTING	Aluminum 9mm Open Dropout			
ADJUSTMENT	A, RL	A, L	RL, P	L, P
FEATURES	Hydraulic Remote Lock-out, Air Spring	Hydraulic Lock-out, Air Spring	Hydraulic Remote Lock-Out	Hydraulic Lock-Out
SYSTEM	Oil(R), Air(L)		Oil(R), Coil(L)	
TRAVEL (mm)	29": 50, 60mm			
BRAKE TYPE	Disc only			
WEIGHT (kgs) (w/ 200mm steerer)	2.89	2.83	2.9	2.84

* A: Air, RL: Remote Lock-out, L: Lock-out, P: Preload
* With Standard Fender Mount Baracket
◆ Fixed rebound option

www.rstsuspension.com

PULSE 27.5-15

MODEL	Air-RL ◆	Air-TNL ◆
STEERER	28.6mm Steel (Optional 1.5" Steel tapered steerer)	
CROWN PITCH	130mm	
CROWN	Aluminum Black	
STANCHION	32mm Steel QPQ Black	
CASTING	Magnesium 15mm QR	
ADJUSTMENT	A, RL	A, L
FEATURES	Hydraulic Remote Lock-out, Air Spring	Hydraulic Lock-out, Air Spring
SYSTEM	Oil(R), Air(L)	
TRAVEL (mm)	27.5": 60, 80, 100mm	
BRAKE TYPE	Disc only	
WEIGHT (kgs) (w/ 200mm steerer)	2.38	2.32

* A: Air, RL: Remote Lock-out, L: Lock-out, P: Preload
◆ Fixed rebound option

PULSE 27.5 AIR/COIL

MODEL	Air-RL ◆	Air-TNL ◆	RL ◆	TNL ◆
STEERER	28.6mm Steel (Optional 1.5" Steel tapered steerer)			
CROWN PITCH	130mm			
CROWN	Aluminum Black			
STANCHION	30mm Steel QPQ Black			
CASTING	Aluminum 9mm Open Dropout			
ADJUSTMENT	A, RL	A, L	RL, P	L, P
FEATURES	Hydraulic Remote Lock-out, Air Spring	Hydraulic Lock-out, Air Spring	Hydraulic Remote Lock-Out	Hydraulic Lock-Out
SYSTEM	Oil(R), Air(L)		Oil(R), Coil(L)	
TRAVEL (mm)	27.5": 50mm			
BRAKE TYPE	Disc only			
WEIGHT (kgs) (w/ 200mm steerer)	2.81	2.75	2.82	2.76

* A: Air, RL: Remote Lock-out, L: Lock-out, P: Preload
* With Standard Fender Mount Baracket
◆ Fixed rebound option

VOGUE E-15/9

MODEL	15 Air TRL	15 Air	9 Air TRL	9 Air
STEERER	1.5" A7050 Aluminum tapered steerer			
CROWN PITCH	130mm			
CROWN	Aluminum Black			
STANCHION	30mm A7050 Aluminum Hard Anodize Black			
CASTING	Aluminum 15mm Blot Axle		Aluminum 9mm Open Dropout	
ADJUSTMENT	A, R, TRL	A, R, L, C	A, R, TRL	A, R, L, C
FEATURES	Hydraulic Rebound adjust, Remote Lock-out, Air Spring	Hydraulic Compression, Rebound adjust, Lock-out, Air Spring	Hydraulic Rebound adjust, Remote Lock-out, Air Spring	Hydraulic Compression, Rebound adjust, Lock-out, Air Spring
SYSTEM	OCR(R), Air(L)			
TRAVEL (mm)	700C: 50, 60,80mm			
BRAKE TYPE	Disc or Disc & V-brake			
WEIGHT (kgs) (w/ 200mm steerer)	2.40	2.38	2.36	2.34

* A: Air, R: Rebound, C: Compression, TRL: Remote Lock-out, L: Lock-out

VIV Air E-15/9

MODEL	15 RL ◆	15 TNL ◆	9 RL ◆	9 TNL ◆
STEERER	28.6mm Steel (Optional 1.5" Aluminum tapered steerer)			
CROWN PITCH	130mm			
CROWN	Aluminum Black			
STANCHION	30mm Steel QPQ Black			
CASTING	Aluminum 15mm Blot Axle		Aluminum 9mm Open Dropout	
ADJUSTMENT	A, RL	A, L	A, RL	A, L
FEATURES	Hydraulic Remote Lock-out, Air Spring	Hydraulic Lock-out, Air Spring	Hydraulic Remote Lock-out, Air Spring	Hydraulic Lock-out, Air Spring
SYSTEM	Oil(R), Air(L)			
TRAVEL (mm)	700C: 50, 60, 80mm			
BRAKE TYPE	Disc or Disc & V-brake			
WEIGHT (kgs) (w/ 200mm steerer)	2.84	2.78	2.80	2.74

* A: Air, RL: Remote Lock-out, L: Lock-out
◆ Fixed rebound option

www.rstsuspension.com

PILOT

MODEL	
WHEEL SIZE	700C
TRAVEL (mm)	40mm
FEATURES	Alu. Blade Spring Preload
STEERER	1.5" Taper Steerer 7050 Aluminum
LOWER	Aluminum 9mm Open Dropout
BRAKE TYPE	Roller& Disc brake only
WEIGHT (kgs) (w/ 200mm steerer)	2.10

ADJUST SEATPOST

ELEV 8 E

MODEL	ELEV 8 E
FUNCTION	Hydraulic Height Adjustment Seat Post
TRAVEL	100, 125, 150mm
FEATURES	Electronic Remote Operated
DIAMETER	30.9 / 31.6mm
LENGTH (TRAVEL / LENGTH)	TR100: 420mm/ TR125: 445mm/ TR150 :510mm
WEIGHT	700-710g (30.9mm) 710-720g (31.6mm)

ELEV 8 H

MODEL	ELEV 8 H	ELEV 8 H-S
FUNCTION	Hydraulic Height Adjustment Seat Post	
TRAVEL	100, 125, 150mm	
FEATURES	External Hydraulic Remote Operated	Stealth Hydraulic Remote Operated
DIAMETER	30.9 / 31.6mm	
LENGTH (TRAVEL / LENGTH)	TR100: 365mm/ TR125: 414mm/ TR150 :439mm	
WEIGHT	735-745g (30.9mm) 745-755g (31.6mm)	685-695g (30.9mm) 695-705g (31.6mm)

ELEV 8 A

MODEL	ELEV 8 A	ELEV 8 A-S
FUNCTION	Air Height Adjustment Seat Post	
TRAVEL	100, 125, 150mm	
FEATURES	External Air Remote Operated	Stealth Air Remote Operated
DIAMETER	30.9 / 31.6mm	
LENGTH (TRAVEL / LENGTH)	TR100: 344mm/ TR125: 418mm/ TR150 :444mm	
WEIGHT	685-695g (30.9mm) 695-705g (31.6mm)	635-645g (30.9mm) 645-655g (31.6mm)

AM PACKAGE

Air Cartridge Upgrade Kit

The perfect upgrade for your coil spring fork!

It covers the widest possible range of riders weight and allows for custom tuning to the riders preference. In addition, it shaves some weight compared to a standard coil spring. Combine easy adjustability with the weight savings and this upgrade is a must have.

Fitments Available For

MODEL		
32mm Stanchion Forks	#H5GDPCDC2012-2	OMEGA 29 / 27.5, AERIAL 29 / 27.5
32mm Stanchion Forks	#H5GDPCDC2012-1	AERIAL 26
30mm Stanchion Forks	#H5GDPCDC2012-3	OMEGA 26 ALL BLAZE series

High Pressure Air-Pump

RST's on inflation pump for suspension forks and rear shocks.

A must have for shops, mechanics, and basically all RST Air fork riders.

Dial in the perfect tune on your ride.

Fitments Available For

MODEL		
Air-Pump	#H5PFGP-2200-300	ALL RST Air forks

GREASE

Keep your suspension performing at its peak.

Genuine RST grease was developed to withstand the most severe conditions. A perfectly balanced, lithium free suspension lubricant to retain that factory fresh performance of your RST fork.

To be used for all suggested maintenance intervals.

Fitments Available For

MODEL		
Lubrication Kit 50g	#H5GACB182	ALL RST FORK
Lubrication Kit 5g	#M5FA1-2990-000	STEM SHOCK

RST FORK SEAL KITS

Only use genuine RST seals to keep your fork performing at its peak. Seals keep the dust out and the grease in. Sponge with oil can make fork compression smoothly. SAG ring can help to measure SAG value easily. The seal kits need to be replaced when worn.

Fitments Available For

MODEL		
Seal kits for 38mm	#H5GBHJCJC01-KT	KILLAH 29, STITCH 29
Seal kits for 36mm	#H5FXY-2611-000-KT	KILLAH 27.5/26, STITCH 27.5/26, STORM, SPACE
Seal kits for 34mm	#H5GBHECKC1-KT	ROGUE, TITAN, SLOPE
Seal kits for 32mm	#H5GBH8CEC1-KT	REVOLT, REVEAL, SNYPER, RENEGADE F1RST 26/27.5/29/110 series

SPRING SEALS

Only use genuine RST seals to keep your fork performing at its peak. Spring energized lip-seals keep the dust out and the grease in.The dust seals need to be replaced when worn.

Fitments Available For

Seal for 32mm	#H5GBH8CEC1	AERIAL 110-15, ALPHA 110-15
Seal for 32mm	#H5GBHBAEC1	AERIAL 26/27.5/29/110-9, ALPHA 110-9, OMEGA 29/27.5, DIRT, PULSE 29-15
Seal for 30mm	#H5GBHCCC1-1	F1RST PLATINUM, F1RST 24-15
Seal for 30mm	#H5GBH8CDC2	OMEGA 26, BLAZE 27.5/29, PULSE 27.5/29, VOLANT, VIVAir E, VOGUE E
Seal for 28.6mm	#H5GBH8CCC1	VOGUE, F1RST 24
Seal for 28.6mm	#H5GBHHCCC022	GILA 26/27.5/29, VITA, VIVAir, NOVA, AERIAL 24
Seal for 28.6mm	#H5GBHHCCC023	VERSE
Seal for 25.4mm	#H5GBHCBC2	CAPA, NEON, URBAN

(For OMEGA series only)

ADJUSTER (preload)

Genuine RST preload adjusters for replacement when something goes wrong.A wide range of adjustment, combined with high reliability, distinguish these adjusters.

Fitments Available For

MODEL		
Adjuster for 32mm	#H5GAEAB29-1	DIRT
Adjuster for 32mm	#H5GAE0A29-1	OMEGA 29/27.5, ALPHA series
Adjuster for 30mm	#H5GAE0A30-1	OMEGA 26
Adjuster for 30mm	#H5FVP-2162-100-1	BLAZE series, VOLANT
Adjuster for 28.6mm	#H5FNM-2163-300-1	GILA 29/27.5
Adjuster for 28.6mm	#H5FNM-2163-100-1	GILA 26, VITA, NOVA, VERSE
Adjuster for 25.4mm	#H5FNA-2162-100-1	CAPA, NEON, URBAN

RST SPECIAL WRENCH

You have to have the right tools to do the job.

Genuine RST preload adjusters have a unique shape that makes them stronger and you need the right tool to remove them for sporing changes and fork services. One tool conveniently fits all forks past,present and future.

Fitments Available For

MODEL		
RST wrench For preload adjusters	#H5GAC616	OMEGA, BLAZE, GILA, CAPA, VITA, NOVA, VERSE, NEON, URBAN

Caps

Fitments Available For

MODEL		
Cap for 32mm	#H5GAEDMG29	OMEGA 29 T / 27.5 T, ALPHA T
Cap for 30mm	#H5GAEDMG275	OMEGA 26 T, VOLANT T, ALL BLAZE T series
Cap for 28.6mm	#H5GAE8MG030	GILA 26 T, VITA T, NOVA T, VERSE T
Cap for 25.4mm	#H5FH2-2340-000	CAPA T, NEON T, URBAN T

Smart Remote Lock-out (SRL) Upgrade Kit

The SRL Upgrade moves your fork's compression adjustment and lock-out control to a more convenient location, on to your handlebar! The SRL Upgrade still allows the selection of different compression settings but also a locked-out setting at your finger tips while you ride.

The SRL Upgrade Kit can be mounted on most forks with a crown mounted lock-out control.

Fitments Available For

MODEL		
SRL Upgrade Kit	#H5GDPBARL2011	ALL RST fork

O-Ring Kit

Only use RST genuine o-rings to for the maintenance to keep the forks performing at its peak.

Special rubber compounds keep the fork being smooth.

The O-Rings need to be replaced when worn.

Please refer to the RST owners manual.

MODEL	
O-ring kit for 34mm	H5GORHGMC0-AM
O-ring kit for 32mm	H5GORHGEC0-AM

DIMENSIONS

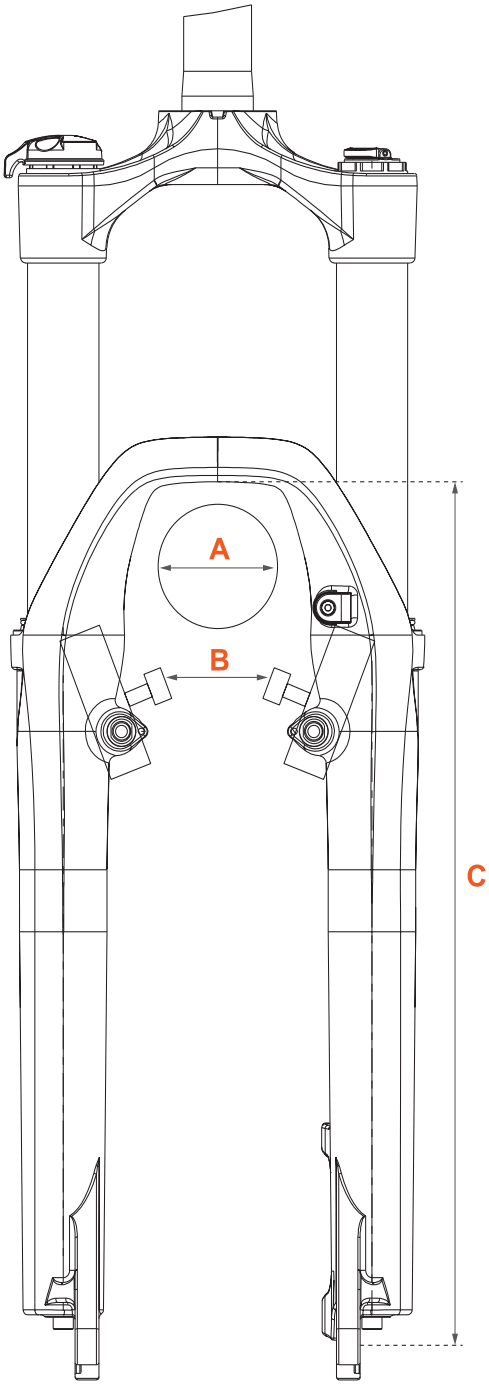

MODEL NAME	WIDTH A	WIDTH B	WIDTH C
ROGUE 110-15	<83 for 27.5+ ; <62 for 29	-	380
TITAN 110-15	<83 for 27.5+ ; <62 for 29	-	380
FIRST 110-15 29 / 27.5+	<75 for 27.5+ ; <72 for 29	-	390
FIRST 110-9 29 / 27.5+	<75 for 27.5+ ; <62 for 29	-	378
FIRST 110-9 27.5 / 26	<75	-	365
AERIAL 110-15 29 / 27.5+	<75 for 27.5+ ; <72 for 29	-	390
AERIAL 110-9 29 / 27.5+	<75 for 27.5+ ; <62 for 29	-	378
AERIAL 110-9 27.5 / 26	<75	-	365
ALPHA 110-15 29 / 27.5+	<75 for 27.5+ ; <72 for 29	-	390
ALPHA 110-9 29 / 27.5+	<75 for 27.5+ ; <62 for 29	-	378
ALPHA 110-9 27.5 / 26	<75	-	365
REBEL	<83	-	-
KILLAH	<69	-	365
STITCH	<69	-	365
STORM	<69	-	365
ROGUE	<62	-	365
TITAN	<62	-	365
ROVER	<62	-	365
RENEGADE	<124	-	390
REVOLT 29-15	<69	-	380
REVOLT 29	<69	-	380
REVOLT 27.5-15	<62	-	365
REVOLT 27.5	<62	-	365
REVEAL 29-15	<69	-	380
REVEAL 29	<69	-	380
REVEAL 27.5-15	<62	-	365
REVEAL 27.5	<62	-	365
REVEAL 26	<55	-	350
F1RST 29-15	<69	-	380
F1RST 29	<69	-	380
F1RST 27.5-15	<62	-	365
F1RST 27.5	<62	-	365
F1RST 26	<55	58	350
F1RST PLATINUM	<55	58	350
F1RST 24-15	<55	-	350
F1RST 24	<55	54	317
AERIAL 29	<69	-	380
AERIAL 27.5	<62	-	365
AERIAL 26	<55	58	350
AERIAL 24	<55	54	317

MAXIMUM ROTOR SIZE
203
203
180
180
180
180
180
180
180
180
203
203
203
203
203
203
203
203
180
180
180
180
180
180
180
180
180
180
180
180
180
180
180
180
180
180
180
180

MODEL NAME	WIDTH A	WIDTH B	WIDTH C	MAXIMUM ROTOR SIZE
SNYPER	<62	-	317	180
SPEX	<63	54	291	180
OMEAG 29	<69	-	380	180
OMEGA 27.5	<62	-	365	180
OMEGA 26	<55	58	350	180
BLAZE 29	<72	-	390	180
BLAZE 27.5	<62	-	370	180
GILA 29	<69	-	380	180
GILA 27.5	<58	60	365	180
GILA 26	<58	60	350	180
CAPA 29/27.5	<69	-	380/ 365	180
CAPA 26/24/20	<58	54	352/ 322/ 289	160
SLOPE	<62	-	365	203
SPACE	<69	-	365	203
DIRT	<56	58	350	180
VOGUE	<56	63	380	180
VIVAir	<56	63	380	180
VITA	<56	63	380	180
VOLANT	<56	63	380	180
NOVA	<56	54	380	180
VERSE	<55	54	377	160
NEON	<55	54	382	180
NEON PLS	<56	54	380	180
URBAN	<55	-	377	160
PULSE 29-15	<69	-	380	180
PULSE 29	<72	-	390	180
PULSE 27.5	<62	-	370	180
PULSE 26	<59	63	350	180
SS-M7 / RF-M7	<45	45	380	160
SS-M6 / RF-M6	<50	45	345	160
SS-A7	<50	-	382	180
SS-A6	<50	45	345	180
SS-A4	<45	45	318	160
SS-A2-100	<32	44	265	160
SS-A2-75	<32	38	265	-

PRODUCT **SPEC**

Bike Category	Down Hill		Free Ride						
Model	**KILLAH**		**STITCH**			**STORM**	**REBEL V2**		
	29	27.5 / 26	29 COIL	27.5 / 26 AIR	27.5 / 26 COIL		Air	Air-TRL	Air w/o Lockout
Steerer	28.6mm 7050 Aluminum		1.5" Tapered steerer 7050 Aluminum	28.6mm 7050 Aluminum		28.6mm Cr-Mo steel	1.5" Tapered steerer 7050 Aluminum		
1.5" Steerer (Straigh or Taper)	–		–	Option		Option	–		
Crown	145mm-Dual	138mm-Dual	145mm	138mm		138mm	140mm		
	Aluminum Black		Aluminum Black			Aluminum Black	Aluminum Black		
Stanchion	38mm 7050 Aluminum	36mm 7050 Aluminum	38mm 7050 Aluminum	36mm 7050 Aluminum		36mm steel	32mm 7050 Aluminum		
	Hard Anodize Black		Hard Anodize Black			QPQ black	Hard Anodize Black		
Lower	Magnesium		Magnesium			Magnesium	Magnesium		
	20x110mm boost Bolt Axle	20mm Bolt Axle	15x110mm Bolt Axle (Optional 20x110mm boost)	20mm QR		20mm QR	15x110mm Bolt Axle (Optional 20x110mm boost)		
Feature	Hydraulic Compression and Rebound adjust		Hydraulic compression and Rebound adjust	Hydraulic compression and Rebound adjust, Air spring	Hydraulic compression and Rebound adjust	Hydraulic Rebound adjust	Hydraulic compression and Rebound adjust, Lock-out, Air Spring	Hydraulic compression and Rebound adjust, Remote Lock-out, Air Spring	Hydraulic compression and Rebound adjust, Air spring
Damper	OCR+		OCR+			Hydraulic Cartridge	OCR+		
Spring	Coil		Coil	Air	Coil	Coil	Air		
Adjustment	R, C		R, C	A, R, C	R, C	R	A, R, L, C	A, R, RL	A, R, C
Travel	200mm		160, 170, 180mm			160, 170, 180mm	29": 80, 100, 130mm 27.5+: 100, 130, 140, 150mm		
Fork offset (mm)	51mm	43mm	51mm	43mm		43mm	43mm		
Fork height (mm)	29": 610	27.5": 580 26": 565	29": 605	27.5": 555 / 565 / 575 26": 540 / 550 / 560		27.5": 555 / 565 / 575 26": 540 / 550 / 560	29": 490 / 510 / 540 27.5+: 510 / 540 / 550 / 560		
Brake Type	Disc only		Disc only			Disc only	Disc only		
Disc Brake Mount	Post		Post			Post	Post		
Recommended Max. Rotor Size in mm	203		203			203	203		
Dynamo Bracket Mount	–		–			–	–		
Cable Guide for Hub Dynamo	–		–			–	–		
Roller Brake Mount	–		–			–	–		
Weight (kgs) (w/steerer at 200mm)	29": 3.25	27.5": 3.22 26": 3.20	29":2.88	27.5": 2.28 26": 2.26	27.5": 2.57 26": 2.55	27.5": 3.34 26": 3.32	29":2.25 27.5"+: 2.35	29":2.23 27.5"+: 2.33	29":2.23 27.5"+: 2.33
Wheel size	29"	27.5"/ 26"	29"	27.5"/ 26"		27.5"/ 26"	29" / 27.5"+		
Recommended Max. Tire Width(mm)	72 (2.8 inch)	66 (2.6 inch)	72 (2.8 inch)	66 (2.6 inch)		66 (2.6 inch)	27.5"+: 76 (3.0 inch) / 29": 61 (2.4 inch)		
Origin of Production	Taiwan		Taiwan			Taiwan	Taiwan		

◆ Fixed rebound option

All Mountain												
ROGUE			TITAN			ROVER 27.5						
Air w/o Lockout	Air-TRL	Air	Air w/o Lockout	Air-TRL	Air	AIR-RA	AIR-RL ◆	AIR-TNL ◆	RA	RL ◆	TNL ◆
28.6mm 7050 Aluminum			28.6mm 7050 Aluminum			1.5" Steel tapered steerer					
Option			Option			–					
130mm			130mm			130mm					
Aluminum Black			Aluminum Black			Aluminum Black					
34mm 7050 Aluminum			34mm 7050 Aluminum			34mm Steel					
Hard Anodize Black			Hard Anodize Black			QPQ black					
Magnesium			Magnesium			Magnesium					
15mm QR			15mm QR			15mm QR					
Hydraulic compression and Rebound adjust, Air spring	Hydraulic Rebound adjust, Remote Lock-out, Air spring	Hydraulic compression and Rebound adjust, Lock-out, Air spring	Hydraulic compression and Rebound adjust, Air spring	Hydraulic Rebound adjust, Remote Lock-out, Air spring	Hydraulic compression and Rebound adjust, Lock-out, Air spring	Hydraulic Rebound adjust	Hydraulic Remote Lock-Out	Hydraulic Lock-Out	Hydraulic Rebound adjust	Hydraulic Remote Lock-Out	Hydraulic Lock-Out
OCR+			OCR			Hydraulic Cartridge					
Air			Air			Air			Coil		
A, R, C	A, R, RL	A, R, L, C	A, R, C	A, R, RL	A, R, L, C	R, A	RL, A	L, A	R,P	RL, P	L, P
140, 150, 160mm			140, 150mm			130, 140 mm					
43mm			43mm			43mm					
27.5": 535 / 545 / 555 26": 520 / 530 / 540			27.5": 535 / 545 / 555 26": 520 / 530 / 540			525 / 535					
Disc only			Disc only			Disc only					
Post			Post			Post					
203			203			203					
–			–			–					
–			–			–					
–			–			–					
27.5": 2.00 26": 1.98	27.5": 2.02 26": 2.00"	27.5": 2.00 26": 1.98	27.5": 2.29 26": 2.27	27.5": 2.31 26": 2.29	27.5": 2.29 26": 2.27	2.88	2.97	2.91	3.14	3.23	3.17
27.5"/ 26"			27.5"/ 26"			27.5"					
61 (2.4 inch)			61 (2.4 inch)			61 (2.4 inch)					
Taiwan			Taiwan			Taiwan					

Bike Category	Fat Bike											
Model	GUIDE						RENEGADE			ROGUE 110-15		
	26 TNL ◆	26 MLC	26 T	20 TNL ◆	20 MLC	20 T	Air-TRL	Air	TNL ◆	Air w/o Lockout	Air-TRL	Air
Steerer	28.6mm Steel			28.6mm Steel			28.6mm 7050 Aluminum		1.5" Steel Tapered steerer	1.5" Tapered steerer 7050 Aluminum		
1.5" Steerer (Straigh or Taper)	Option			Option			Option		–	–		
Crown	180mm			180mm			190mm			150mm		
	Aluminum Black			Aluminum Black			Aluminum Black			Aluminum Black		
Stanchion	32mm Steel			32mm Steel			32mm 7050 Aluminum		32mm Steel	34mm 7050 Aluminum		
	CP			CP			Hard Anodize Black		CP	Hard Anodize Black		
Lower	Aluminum			Aluminum			Magnesium			Magnesium		
	9mm open dropout			9mm open dropout			15x150mm QR			15x110mm QR		
Feature	Hydraulic Lock-Out	Mechanical Lock-Out	–	Hydraulic Lock-Out	Mechanical Lock-Out	–	Hydraulic Rebound adjust, Remote Lock-out, Air spring	Hydraulic compression and Rebound adjust, Lock-out, Air spring	Hydraulic Lock-Out	Hydraulic compression and Rebound adjust, Air spring	Hydraulic Rebound-adjust, Remote Lock-out, Air spring	Hydraulic compression and Rebound adjust, Lock-out, Air spring
Damper	Hydraulic Cartridge	–	–	Hydraulic Cartridge	–	–	OCR		Hydraulic Cartridge	OCR+		
Spring	Coil			Coil			Air		Coil	Air		
Adjustment	L, P	L, P	P	L, P	L, P	P	A, R, RL	A, R, L, C	L, P	A, R, C	A, R, RL	A, R, L, C
Travel	75, 80, 95 mm			45, 60 mm			80, 100, 120mm			120, 130, 140, 150, 160mm		
Fork offset (mm)	50mm			50mm			51mm			51mm		
Fork height (mm)	485 / 490 / 505			410/425			500 / 520 / 540			530 / 540 / 550 / 560 / 570		
Brake Type	Disc only			Disc only			Disc only			Disc only		
Disc Brake Mount	Post			Post			Post			Post		
Recommended Max. Rotor Size in mm	180			180			203			203		
Dynamo Bracket Mount	–			–			–			–		
Cable Guide for Hub Dynamo	–			–			–			–		
Roller Brake Mount				–			–			–		
Weight (kgs) (w/steerer at 200mm)	3.62	3.47	3.32	3.37	3.22	3.07	2.22	2.20	3.00	2.33	2.35	2.33
Wheel size	26"			20"			26"			29" / 27.5"+		
Recommended Max. Tire Width(mm)	115 (4.5 inch)			115 (4.5 inch)			102 (4.0 inch)			27.5"+: 76 (3.0 inch) / 29": 61 (2.4 inch)		
Origin of Production	China			China			Taiwan			Taiwan		

◆ Fixed rebound option

Plus Bike													
TITAN 110-15			VIBE 110-15						FIRST 110-15 29 / 27.5+		FIRST 110-9 29 / 27.5+	
Air w/o Lockout	Air-TRL	Air	RA	RL ◆	TNL ◆	AIR-RA	AIR-RL ◆	AIR-TNL ◆	Air-TRL	Air	Air-TRL	Air
1.5" Tapered steerer 7050 Aluminum			1.5" Steel tapered steerer						28.6mm 7050 Aluminum		28.6mm 7050 Aluminum	
–			–						Option		Option	
150mm			150mm						140mm		140mm	
Aluminum Black			Aluminum Black						Aluminum Black		Aluminum Black	
34mm 7050 Aluminum			34mm Steel						32mm 7050 Aluminum		32mm 7050 Aluminum	
Hard Anodize Black			QPQ black						Hard Anodize Black		Hard Anodize Black	
Magnesium			Magnesium						Magnesium		Magnesium	
15x110mm QR			15x110mm Bolt Axle						15x110mm Bolt Axle		9x110mm open dropout	
Hydraulic compression and Rebound adjust, Air spring	Hydraulic Rebound adjust, Remote Lock-out, Air spring	Hydraulic compression and Rebound adjust, Lock-out, Air spring	Hydraulic Rebound adjust	Hydraulic Remote Lock-Out	Hydraulic Lock-Out	Hydraulic Rebound adjust	Hydraulic Remote Lock-Out	Hydraulic Lock-Out	Hydraulic Rebound adjust, Remote Lock-out, Air spring	Hydraulic compression and Rebound adjust, Lock-out, Air spring	Hydraulic Rebound adjust Remote Lock-out, Air spring	Hydraulic compression and Rebound adjust, Lock-out, Air spring
OCR			Hydraulic Cartridge						OCR		OCR	
Air			Coil			Air			Air		Air	
A, R, C	A, R, RL	A, R, L, C	R, P	RL, P	L, P	R, A	RL, A	L, A	A, R, RL	A, R, L, C	A, R, RL	A, R, L, C
120, 130, 140, 150mm			100, 120, 130, 140mm						80, 100, 120mm		80, 100, 120mm	
51mm			51mm						51mm		51mm	
530 / 540 / 550 / 560			510 / 530 / 540 / 550						500 / 520 / 540		490 / 510 / 530	
Disc only			Disc only						Disc only		Disc only	
Post			Post						Post		Post	
203			203						180		180	
–			–						–		–	
–			–						–		–	
–			–						–		–	
2.38	2.40	2.38	3.47	3.56	3.50	3.27	3.36	3.30	2.12	2.10	2.02	2.00
29" / 27.5"+			29" / 27.5"+						29" / 27.5"+		29" / 27.5"+	
27.5"+: 76 (3.0 inch) / 29": 61 (2.4 inch)			27.5"+: 76 (3.0 inch) / 29": 61 (2.4 inch)						27.5"+: 72 (2.8 inch) / 29": 61 (2.4 inch)		27.5"+: 72 (2.8 inch) / 29": 61 (2.4 inch)	
Taiwan			Taiwan						Taiwan		Taiwan	

Bike Category	Plus Bike										
Model	FIRST 110-9 27.5 / 26		AERIAL 110-15 29 / 27.5+			AERIAL 110-9 29 / 27.5+			AERIAL 110-9 27.5 / 26		
	Air-TRL	Air	RL ◆	TNL ◆	MLC	RL ◆	TNL ◆	MLC	RL ◆	TNL ◆	MLC
Steerer	28.6mm 7050 Aluminum		28.6mm 7050 Aluminum			28.6mm 7050 Aluminum			28.6mm 7050 Aluminum		
1.5" Steerer (Straigh or Taper)	Option		Option			Option			Option		
Crown	140mm		140mm			140mm			140mm		
	Aluminum Black		Aluminum Black			Aluminum Black			Aluminum Black		
Stanchion	32mm 7050 Aluminum		32mm Steel			32mm Steel			32mm Steel		
	Hard Anodize Black		QPQ black			QPQ black			QPQ black		
Lower	Magnesium		Magnesium			Magnesium			Magnesium		
	9x110mm open dropout		15x110mm Bolt Axle			9x110mm open dropout			9x110mm open dropout		
Feature	Hydraulic Rebound adjust, Remote Lock-out, Air spring	Hydraulic compression and Rebound adjust, Lock-out, Air spring	Hydraulic Remote Lock-out, Air spring	Hydraulic Lock-out, Air spring	Mechanical Lock-out, Air spring	Hydraulic Remote Lock-out, Air spring	Hydraulic Lock-out, Air spring	Mechanical Lock-out, Air spring	Hydraulic Remote Lock-out, Air spring	Hydraulic Lock-out, Air spring	Mechanical Lock-out, Air spring
Damper	OCR		Hydraulic Cartridge		–	Hydraulic Cartridge		–	Hydraulic Cartridge		–
Spring	Air		Air			Air			Air		
Adjustment	A, R, RL	A, R, L, C	A, RL	A, L	A, L	A, RL	A, L	A, L	A, RL	A, L	A, L
Travel	80, 100, 120mm		80, 100, 120mm			80, 100, 120mm			80, 100, 120mm		
Fork offset (mm)	43mm		51mm			51mm			43mm		
Fork height (mm)	27.5: 475 / 495 / 515 26: 460 / 480 / 500		500 / 520 / 540			490 / 510 / 530			27.5: 475 / 495 / 515 26: 460 / 480 / 500		
Brake Type	Disc only		Disc only			Disc only			Disc only		
Disc Brake Mount	Post		Post			Post			Post		
Recommended Max. Rotor Size in mm	180		180			180			180		
Dynamo Bracket Mount	–		–			–			–		
Cable Guide for Hub Dynamo	–		–			–			–		
Roller Brake Mount	–		–			–			–		
Weight (kgs) (w/steerer at 200mm)	1.85	1.83	2.61	2.55	2.32	2.51	2.45	2.22	2.34	2.28	2.05
Wheel size	27.5" / 26"		29" / 27.5"+			29" / 27.5"+			27.5" / 26"		
Recommended Max. Tire Width(mm)	66 (2.6 inch)		27.5"+: 72 (2.8 inch) / 29": 61 (2.4 inch)			27.5"+: 72 (2.8 inch) / 29": 61 (2.4 inch)			66 (2.6 inch)		
Origin of Production	Taiwan		Taiwan			Taiwan			Taiwan		

◆ Fixed rebound option

	Plus Bike														
	ALPHA 110-15 29 / 27.5+					ALPHA 110-9 29 / 27.5+					ALPHA 110-9 27.5 / 26				
	RA	RL ◆	TNL ◆	MLC	T	RA	RL ◆	TNL ◆	MLC	T	RA	RL ◆	TNL ◆	MLC	T
	28.6mm Steel					28.6mm Steel					28.6mm Steel				
	Option					Option					Option				
	140mm					140mm					140mm				
	Aluminum Black					Aluminum Black					Aluminum Black				
	32 mm Steel					32mm Steel					32mm Steel				
	CP					CP					CP				
	Magnesium					Magnesium					Magnesium				
	15x110mm Bolt Axle					9x110mm open dropout					9x110mm open dropout				
	Hydraulic Rebound adjust	Hydraulic Remote Lock-Out	Hydraulic Lock-Out	Mechanical Lock-out	–	Hydraulic Rebound adjust	Hydraulic Remote Lock-Out	Hydraulic Lock-Out	Mechanical Lock-out	–	Hydraulic Rebound adjust	Hydraulic Remote Lock-Out	Hydraulic Lock-Out	Mechanical Lock-out	–
	Hydraulic Cartridge			–		Hydraulic Cartridge			–		Hydraulic Cartridge			–	
	Coil					Coil					Coil				
	R, P	RL, P	L, P	L, P	P	R, P	RL, P	L, P	L, P	P	R, P	RL, P	L, P	L, P	P
	80, 100, 120, 130, 135mm					80, 100, 120, 130, 140mm					80, 100, 120, 140mm				
	51mm					51mm					43mm				
	500 / 520 / 540 / 550 / 555					490 / 510 / 530 / 540 / 550					475 / 495 / 515 / 525 / 535				
	Disc only					Disc only					Disc only				
	Post					Post					Post				
	180					180					180				
	–					–					–				
	–					–					–				
	–					–					–				
	2.62	2.75	2.64	2.44	2.44	2.54	2.65	2.57	2.34	2.34	2.37	2.46	2.40	2.17	2.17
	29" / 27.5"+					29" / 27.5"+					27.5" / 26"				
	27.5"+: 72 (2.8 inch) / 29": 61 (2.4 inch)					27.5"+: 72 (2.8 inch) / 29": 61 (2.4 inch)					66 (2.6 inch)				
	China					China					China				

Bike Category	Dirt Jump			Dirt Jump				29er			
Model	SPACE		SLOPE	DIRT				REVOLT			
	Jump	Free		RA	T	15 RA	15 T	29-15 TRL	29-15	29 TRL	29
Steerer	28.6mm 7050 Aluminum	28.6mm Cr-Mo steel	28.6mm 7050 Aluminum	28.6mm Cr-Mo steel				1.5" Tapered steerer 7050 Aluminum			
1.5" Steerer (Straigh or Taper)	–		Option	–				–			
Crown	138mm		130mm	130mm				130mm			
	Aluminum Black		Aluminum Black	Aluminum Black				Aluminum Black			
Stanchion	36mm 7050 Aluminum	36mm Steel	34mm 7050 Aluminum	32mm Steel				32mm 7050 Aluminum			
	Hard Anodize Black	QPQ black	Hard Anodize Black	CP				Hard Anodize Black			
Lower	Magnesium		Magnesium	Aluminum				Magnesium			
	20mm Bolt Axle		15mm QR	9mm open dropout		15mm Bolt Axle		15mm QR		9mm open dropout	
Feature	Hydraulic Rebound adjust, Air spring	Hydraulic Rebound adjust	Hydraulic compression and Rebound adjust, Air spring	Hydraulic Rebound adjust	–	Hydraulic Rebound adjust	–	Hydraulic Rebound adjust, Remote Lock-out, Air spring	Hydraulic compression and Rebound adjust, Lock-out, Air spring	Hydraulic Rebound adjust, Remote Lock-out, Air spring	Hydraulic compression and Rebound adjust, Lock-out, Air spring
Damper	Hydraulic Cartridge		OCR+	Hydraulic Cartridge	–	Hydraulic Cartridge	–	OCR			
Spring	Air	Coil	Air	Coil				Air			
Adjustment	A, R	R	A, R, C	R, P	P	R, P	P	A, R, RL	A, R, L, C	A, R, RL	A, R, L, C
Travel	80, 100mm		80, 100, 130mm	80, 100, 130mm				130, 140mm			
Fork offset (mm)	43mm		43mm	38mm				51mm			
Fork height (mm)	465 / 485		27.5": 475 / 495 / 525 26": 470 / 490 / 520	460 / 480 / 510				540 / 550			
Brake Type	Disc only		Disc only	Disc or D+V-brake				Disc only			
Disc Brake Mount	Post		Post	Post				Post			
Recommended Max. Rotor Size in mm	203		203	180				180			
Dynamo Bracket Mount	–		–	–				–			
Cable Guide for Hub Dynamo	–		–	–				–			
Roller Brake Mount	–		–	–				–			
Weight (kgs) (w/steerer at 200mm)	2.63	2.93	27.5": 2.00 26": 1.98	3.01	3.05	3.06	3.11	2.05	2.03	1.91	1.89
Wheel size	26"		27.5" / 26"	26"				29"			
Recommended Max. Tire Width(mm)	66 (2.6 inch)		61 (2.4 inch)	56 (2.2 inch)				61 (2.4 inch)			
Origin of Production	Taiwan		Taiwan	China				Taiwan			

	27.5"				XC 29er				XC 27.5"			
	REVOLT				REVEAL				REVEAL			
	27.5-15 TRL	27.5-15	27.5 TRL	27.5	29-15 TRL	29-15	29 TRL	29	27.5-15 TRL	27.5-15	27.5 TRL	27.5
	1.5" Tapered steerer 7050 Aluminum				28.6mm 7050 Aluminum				28.6mm 7050 Aluminum			
	–				Option				Option			
	130mm				130mm				130mm			
	Aluminum Black				Aluminum Black				Aluminum Black			
	32mm 7050 Aluminum				32mm 7050 Aluminum				32mm 7050 Aluminum			
	Hard Anodize Black				Hard Anodize Black				Hard Anodize Black			
	Magnesium				Magnesium				Magnesium			
	15mm QR		9mm open dropout		15mm QR		9mm open dropout		15mm QR		9mm open dropout	
	Hydraulic Rebound adjust, Remote Lock-out, Air spring	Hydraulic compression and Rebound adjust, Lock-out, Air spring	Hydraulic Rebound adjust, Remote Lock-out, Air spring	Hydraulic compression and Rebound adjust, Lock-out, Air spring	Hydraulic Rebound adjust, Remote Lock-out, Air spring	Hydraulic compression and Rebound adjust, Lock-out, Air spring	Hydraulic Rebound adjust, Remote Lock-out, Air spring	Hydraulic compression and Rebound adjust, Lock-out, Air spring	Hydraulic Rebound adjust, Remote Lock-out, Air spring	Hydraulic compression and Rebound adjust, Lock-out, Air spring	Hydraulic Rebound adjust, Remote Lock-out, Air spring	Hydraulic compression and Rebound adjust, Lock-out, Air spring
	OCR				OCRC				OCR+			
	Air				Air				Air			
	A, R, RL	A, R, L, C	A, R, RL	A, R, L, C	A, R, RL	A, R, L, C	A, R, RL	A, R, L, C	A, R, RL	A, R, L, C	A, R, RL	A, R, L, C
	130, 140mm				80, 100, 120mm				80, 100, 120mm			
	43mm				51mm				43mm			
	525 / 535				490 / 510 / 530				475 / 495 / 515			
	Disc only				Disc only				Disc only			
	Post				Post				Post			
	180				180				180			
	–				–				–			
	–				–				–			
	–				–				–			
	2.03	2.01	1.89	1.87	1.82	1.80	1.80	1.61	1.78	1.76	1.65	1.63
	27.5"				29"				27.5"			
	61 (2.4 inch)				61 (2.4 inch)				61 (2.4 inch)			
	Taiwan				Taiwan				Taiwan			

Bike Category	XC 26"				XC 29er			
Model	REVEAL		F1RST		F1RST			
	26 TRL	26	Platinum TRL	Platinum	29-15 TRL	29-15	29 TRL	29
Steerer	28.6mm 7050 Aluminum		28.6mm 7050 Aluminum		28.6mm 7050 Aluminum			
1.5" Steerer (Straigh or Taper)	Option		Option		Option			
Crown	130mm		130mm		130mm			
	Aluminum Black		Aluminum Black		Aluminum Black			
Stanchion	32mm 7050 Aluminum		30mm 7050 Aluminum		32mm 7050 Aluminum			
	Hard Anodize Black		Hard Anodize Black		Hard Anodize Black			
Lower	Magnesium		Magnesium		Magnesium			
	9mm open dropout		9mm open dropout		15mm QR		9mm open dropout	
Feature	Hydraulic Rebound adjust, Remote Lock-out, Air spring	Hydraulic compression and Rebound adjust, Lock-out, Air spring	Hydraulic Rebound adjust, Remote Lock-out, Air spring	Hydraulic compression and Rebound adjust, Lock-out, Air spring	Hydraulic Rebound adjust, Remote Lock-out, Air spring	Hydraulic compression and Rebound adjust, Lock-out, Air spring	Hydraulic Rebound adjust, Remote Lock-out, Air spring	Hydraulic compression and Rebound adjust, Lock-out, Air spring
Damper	OCRC		OCR		OCR			
Spring	Air		Air		Air			
Adjustment	A, R, RL	A, R, L, C	A, R, RL	A, R, L, C	A, R, RL	A, R, L, C	A, R, RL	A, R, L, C
Travel	80, 100, 120mm		80, 100mm		80, 100, 120mm			
Fork offset (mm)	38mm		38mm		51mm			
Fork height (mm)	460 / 480 / 500		460 / 480		490 / 510 / 530			
Brake Type	Disc or D+V-brake		Disc or D+V-brake		Disc only			
Disc Brake Mount	Post		Post		Post			
Recommended Max. Rotor Size in mm	180		180		180			
Dynamo Bracket Mount	–		–		–			
Cable Guide for Hub Dynamo	–		–		–			
Roller Brake Mount	–		–		–			
Weight (kgs) (w/steerer at 200mm)	1.53	1.51	1.52	1.50	2.15	2.13	1.96	1.94
Wheel size	26"		26"		29"			
Recommended Max. Tire Width(mm)	56 (2.2 inch)		56 (2.2 inch)		61 (2.4 inch)			
Origin of Production	Taiwan		Taiwan		Taiwan			

	XC 27.5"				XC 26"		XC 29er		XC 27.5"	
	F1RST				F1RST		AERIAL Rebound 29		AERIAL Rebound 27.5	
	27.5-15 TRL	27.5-15	27.5 TRL	27.5	26 TRL	26	RL-R	TNL-R	RL-R	TNL-R
	28.6mm 7050 Aluminum				28.6mm 7050 Aluminum		28.6mm 7050 Aluminum		28.6mm 7050 Aluminum	
	Option				Option		Option		Option	
	130mm				130mm		130mm		130mm	
	Aluminum Black				Aluminum Black		Aluminum Black		Aluminum Black	
	32mm 7050 Aluminum				32mm 7050 Aluminum		32mm Steel		32mm Steel	
	Hard Anodize Black				Hard Anodize Black		QPQ black		QPQ black	
	Magnesium				Magnesium		Magnesium		Magnesium	
	15mm QR		9mm open dropout		9mm open dropout		9mm open dropout		9mm open dropout	
	Hydraulic Rebound adjust, Remote Lock-out, Air spring	Hydraulic compression and Rebound adjust, Lock-out, Air spring	Hydraulic Rebound adjust, Remote Lock-out, Air spring	Hydraulic compression and Rebound adjust, Lock-out, Air spring	Hydraulic Rebound adjust, Remote Lock-out, Air spring	Hydraulic compression and Rebound adjust, Lock-out, Air spring	Hydraulic Rebound adjust, Remote Lock-out, Air spring	Hydraulic Rebound adjust Lock-out, Air spring	Hydraulic Rebound adjust, Remote Lock-out, Air spring	Hydraulic Rebound adjust, Lock-out, Air spring
	OCR				OCR		Hydraulic Cartridge		Hydraulic Cartridge	
	Air				Air		Air		Air	
	A, R, RL	A, R, L, C	A, R, RL	A, R, L, C	A, R, RL	A, R, L, C	A, R, RL	A, R, L	A, R, RL	A, R, L
	80, 100, 120mm				80, 100, 120mm		80, 100, 120mm		80, 100, 120mm	
	43mm				38mm		51mm		43mm	
	475 / 495 / 515				460 / 480 / 500		490 / 510 / 530		475 / 495 / 515	
	Disc only				Disc or D+V-brake		Disc only		Disc only	
	Post				Post		Post		Post	
	180				180		180		180	
	–				–		–		–	
	–				–		–		–	
	–				–		–		–	
	2.00	1.98	1.88	1.86	1.82	1.80	2.40	2.34	2.42	2.36
	27.5"				26"		29"		27.5"	
	61 (2.4 inch)				56 (2.2 inch)		61 (2.4 inch)		61 (2.4 inch)	
	Taiwan				Taiwan		Taiwan		Taiwan	

Bike Category	XC 26"		XC 29er					
Model	AERIAL Rebound 26		AERIAL 29-15			AERIAL 29		
	RL-R	TNL-R	RL ◆	TNL ◆	MLC	RL ◆	TNL ◆	MLC
Steerer	28.6mm 7050 Aluminum		28.6mm 7050 Aluminum			28.6mm 7050 Aluminum		
1.5" Steerer (Straigh or Taper)	Option		Option			Option		
Crown	130mm		130mm			130mm		
	Aluminum Black		Aluminum Black			Aluminum Black		
Stanchion	32mm Steel		32mm Steel			32mm Steel		
	QPQ black		QPQ black			QPQ black		
Lower	Magnesium		Magnesium			Magnesium		
	9mm open dropout		15mm QR			9mm open dropout		
Feature	Hydraulic Rebound adjust, Remote Lock-out, Air spring	Hydraulic Rebound adjust, Lock-out, Air spring	Hydraulic Remote Lock-out, Air spring	Hydraulic Lock-out, Air spring	Mechanical Lock-out, Air spring	Hydraulic Remote Lock-out, Air spring	Hydraulic Lock-out, Air spring	Mechanical Lock-out, Air spring
Damper	Hydraulic Cartridge		Hydraulic Cartridge		–	Hydraulic Cartridge		–
Spring	Air		Air			Air		
Adjustment	A, R, RL	A, R, L	A, RL	A, L	A, L	A, RL	A, L	A, L
Travel	80, 100, 120mm		80, 100, 120mm			80, 100, 120mm		
Fork offset (mm)	38mm		51mm			51mm		
Fork height (mm)	460 / 480 / 500		490 / 510 / 530			490 / 510 / 530		
Brake Type	Disc or D+V-brake		Disc only			Disc only		
Disc Brake Mount	Post		Post			Post		
Recommended Max. Rotor Size in mm	180		180			180		
Dynamo Bracket Mount	–		–			–		
Cable Guide for Hub Dynamo	–		–			–		
Roller Brake Mount	–		–			–		
Weight (kgs) (w/steerer at 200mm)	2.37	2.31	2.53	2.47	2.27	2.34	2.28	2.05
Wheel size	26"		29"			29"		
Recommended Max. Tire Width(mm)	56 (2.2 inch)		61 (2.4 inch)			61 (2.4 inch)		
Origin of Production	Taiwan		Taiwan			Taiwan		

◆ Fixed rebound option

	XC 27.5"			XC 26"			XC 29er				
	AERIAL 27.5			AERIAL 26			OMEGA 29				
	RL ◆	TNL ◆	MLC	RL ◆	TNL ◆	MLC	RA	RL ◆	TNL ◆	MLC	T
	28.6mm 7050 Aluminum			28.6mm 7050 Aluminum			28.6mm Steel				
	Option			Option			Option				
	130mm			130mm			130mm				
	Aluminum Black			Aluminum Black			Aluminum Black				
	32mm Steel			32mm Steel			32mm Steel				
	QPQ black			QPQ black			CP				
	Magnesium			Magnesium			Magnesium				
	9mm open dropout			9mm open dropout			9mm open dropout				
	Hydraulic Remote Lock-out, Air spring	Hydraulic Lock-out, Air spring	Mechanical Lock-out, Air spring	Hydraulic Remote Lock-out, Air spring	Hydraulic Lock-out, Air spring	Mechanical Lock-out, Air spring	Hydraulic Rebound adjust	Hydraulic Remote Lock-Out	Hydraulic Lock-Out	Mechanical Lock-out	–
	Hydraulic Cartridge		–	Hydraulic Cartridge		–	Hydraulic Cartridge			–	
	Air			Air			Coil				
	A, RL	A, L	A, L	A, RL	A, L	A, L	R, P	RL, P	L, P	L, P	P
	80, 100, 120mm			80, 100, 120mm			80, 100, 120mm				
	43mm			38mm			51mm				
	475 / 495 / 515			460 / 480 / 500			490 / 510 / 530				
	Disc only			Disc or D+V-brake			Disc only				
	Post			Post			Post				
	180			180			180				
	–			–			–				
	–			–			–				
	–			–			–				
	2.26	2.20	2.00	2.31	2.25	2.02	2.44	2.55	2.47	2.24	2.24
	27.5"			26"			29"				
	61 (2.4 inch)			56 (2.2 inch)			61 (2.4 inch)				
	Taiwan			Taiwan			China				

Bike Category	XC 27.5"					XC 26"				
Model	OMEGA 27.5					OMEGA 26				
	RA	RL ◆	TNL ◆	MLC	T	RA	RL ◆	TNL ◆	MLC	
Steerer	28.6mm Steel					28.6mm Steel				
1.5" Steerer (Straigh or Taper)	Option					Option				
Crown	130mm					130mm				
	Aluminum Black					Aluminum Black				
Stanchion	32mm Steel					30mm Steel				
	CP					CP				
Lower	Magnesium					Magnesium				
	9mm open dropout					9mm open dropout				
Feature	Hydraulic Rebound adjust	Hydraulic Remote Lock-Out	Hydraulic Lock-Out	Mechanical Lock-out	–	Hydraulic Rebound adjust	Hydraulic Remote Lock-Out	Hydraulic Lock-Out	Mechanical Lock-out	
Damper	Hydraulic Cartridge			–		Hydraulic Cartridge			–	
Spring	Coil					Coil				
Adjustment	R, P	RL, P	L, P	L, P	P	R, P	RL, P	L, P	L, P	
Travel	80, 100, 120mm					80, 100, 120mm				
Fork offset (mm)	43mm					38mm				
Fork height (mm)	475 / 495 / 515					460 / 480 / 500				
Brake Type	Disc only					Disc or D+V-brake				
Disc Brake Mount	Post					Post				
Recommended Max. Rotor Size in mm	180					180				
Dynamo Bracket Mount	–					–				
Cable Guide for Hub Dynamo	–					–				
Roller Brake Mount	–					–				
Weight (kgs) (w/steerer at 200mm)	2.27	2.36	2.30	2.07	2.07	2.34	2.44	2.37	2.11	
Wheel size	27.5"					26"				
Recommended Max. Tire Width(mm)	61 (2.4 inch)					56 (2.2 inch)				
Origin of Production	China					China				

◆ Fixed rebound option

		XC 29er					XC 27.5"				
		BLAZE 29					BLAZE 27.5				
	T	RA	RL ◆	TNL ◆	MLC	T	RA	RL ◆	TNL ◆	MLC	T
		28.6mm Steel					28.6mm Steel				
		Option					–				
		130mm					130mm				
		Aluminum Black					Aluminum Black				
		30mm Steel					30mm Steel				
		CP					CP				
		Aluminum					Aluminum				
		9mm open dropout					9mm open dropout				
	–	Hydraulic Rebound adjust	Hydraulic Remote Lock-Out	Hydraulic Lock-Out	Mechanical Lock-out	–	Hydraulic Rebound adjust	Hydraulic Remote Lock-Out	Hydraulic Lock-Out	Mechanical Lock-out	–
	–	Hydraulic Cartridge			–		Hydraulic Cartridge			–	–
		Coil					Coil				
	P	R,P	RL, P	L, P	L, P	P	R,P	RL, P	L, P	L, P	P
		80, 100, 120mm					80, 100, 120, 130mm				
		51mm					44mm				
		500 / 520 / 540					475 / 495 / 515 / 525				
		Disc Only					Disc only				
		Post					Post				
		180					180				
		–					–				
		–					–				
		–					–				
	2.11	2.81	2.90	2.84	2.61	2.61	2.73	2.82	2.76	2.51	2.55
		29"					27.5"				
		66 (2.6 inch)					61 (2.4 inch)				
		China					China				

Bike Category	XC 26"				XC/Sport 29er				XC/Sport 27.5"			
Model	ALEX				GILA 29				GILA 27.5			
	RL ◆	TNL ◆	MLC	T	RL ◆	TNL ◆	MLC	T	RL ◆	TNL ◆	MLC	T
Steerer	28.6mm Steel				28.6mm Steel				28.6mm Steel			
1.5" Steerer (Straigh or Taper)	–				–				–			
Crown	125mm				130mm				125mm			
	Aluminum Black				Aluminum Black				Aluminum Black			
Stanchion	30mm Steel				28.6mm Steel				28.6mm Steel			
	CP				CP				CP			
Lower	Aluminum				Aluminum				Aluminum			
	9mm open dropout				9mm open dropout				9mm open dropout			
Feature	Hydraulic Remote Lock-Out	Hydraulic Lock-Out	Mechanical Lock-out	–	Hydraulic Remote Lock-Out	Hydraulic Lock-Out	Mechanical Lock-out	–	Hydraulic Remote Lock-Out	Hydraulic Lock-Out	Mechanical Lock-out	–
Damper	Hydraulic Cartridge		–		Hydraulic Cartridge		–		Hydraulic Cartridge		–	
Spring	Coil				Coil				Coil			
Adjustment	RL, P	L, P	L, P	P	RL, P	L, P	L, P	P	RL, P	L, P	L, P	P
Travel	80, 100mm				80, 100, 120mm				80, 100mm			
Fork offset (mm)	38mm				51mm				43mm			
Fork height (mm)	460 / 480				490 / 510 / 530				475 / 495			
Brake Type	Disc only				Disc only				Disc or D+V-brake			
Disc Brake Mount	Post				Post				Post			
Recommended Max. Rotor Size in mm	180				180				180			
Dynamo Bracket Mount	–				–				–			
Cable Guide for Hub Dynamo	–				–				–			
Roller Brake Mount	–				–				–			
Weight (kgs) (w/steerer at 200mm)	2.82	2.76	2.51	2.55	2.70	2.64	2.41	2.41	2.50	2.44	2.19	2.14
Wheel size	26"				29"				27.5"			
Recommended Max. Tire Width(mm)	56 (2.2 inch)				61 (2.4 inch)				56 (2.2 inch)			
Origin of Production	China				China				China			

◆ Fixed rebound option

	XC/Sport 26"				XC/Sport 26"				Pavement					
	GILA 26				ANGEL				CAPA 29		CAPA 27.5		CAPA 26	
	RL ◆	TNL ◆	MLC	T	RL ◆	TNL ◆	MLC	T	MLC	T	MLC	T	MLC	T
	28.6mm Steel				28.6mm Steel				28.6mm Steel		28.6mm Steel		28.6/25.4mm Steel	
	–				–				–		–		–	
	125mm				112mm				125mm		125mm		120mm	
	Aluminum Black				Aluminum Black				Aluminum Black		Aluminum Black		Aluminum Black	
	28.6mm Steel				28.6mm Steel				25.4mm Steel		25.4mm Steel		25.4mm Steel	
	CP				CP				CP		CP		CP	
	Aluminum				Magnesium				Aluminum		Aluminum		Aluminum	
	9mm open dropout				9mm open dropout				9mm open dropout		9mm open dropout		9mm open dropout	
	Hydraulic Remote Lock-Out	Hydraulic Lock-Out	Mechanical Lock-out	–	Hydraulic Remote Lock-Out	Hydraulic Lock-Out	Mechanical Lock-out	–	Mechanical Lock-out	–	Mechanical Lock-out	–	Mechanical Lock-out	–
	Hydraulic Cartridge		–		Hydraulic Cartridge		–		–		–		–	
	Coil				Coil				Coil		Coil		Coil	
	RL, P	L, P	L, P	P	RL, P	L, P	L, P	P	L, P	P	L, P	P	L, P	P
	80, 100mm				60, 75mm				60, 80mm		60, 80mm		80mm	
	38mm				43mm				51mm		43mm		38mm	
	460 / 480				450/460				470 / 490		455 / 475		460	
	Disc or D+V-brake				Disc or D+V-brake				Disc or D+V brake		Disc or D+V brake		Disc or D+V-brake	
	Post				IS				Post		Post		IS	
	180				160				180		180		160	
	–				–				–		–		–	
	–				–				–		–		–	
	–				–				–		–		–	
	2.41	2.35	2.10	2.05	2.22	2.16	2.11	2.05	2.28	2.23	2.15	2.10	2.03	1.98
	26"				26"				29"		27.5"		26"	
	56 (2.2 inch)				56 (2.2 inch)				61 (2.4 inch)		61 (2.4 inch)		56 (2.2 inch)	
	China				China				China		China		China	

Bike Category	Junior									
Model	SNYPER		SPEX				F1RST			
	24 TRL	24	TRL	AIR	15 TRL	15 AIR	24-15 TRL	24-15	24 TRL	24
Steerer	28.6mm 7050 Aluminum		28.6mm 7050 Aluminum				28.6mm 7050 Aluminum			
1.5" Steerer (Straigh or Taper)	Option		–				Option		–	
Crown	130mm		125mm				130mm		125mm	
	Aluminum Black		Aluminum Black				Aluminum Black			
Stanchion	32mm 7050 Aluminum		30mm 7050 Aluminum				30mm 7050 Aluminum		28.6mm 7050 Aluminum	
	Hard Anodize Black		Hard Anodize Black				Hard Anodize Black			
Lower	Magnesium		Magnesium				Magnesium			
	9mm open dropout		9mm open dropout		15mm Blot Axle		15mm QR		9mm open dropout	
Feature	Hydraulic Rebound adjust, Remote Lock-out, Air spring	Hydraulic compression and Rebound adjust, Lock-out, Air spring	Hydraulic Rebound adjust, Remote Lock-out, Air spring	Hydraulic compression and Rebound adjust, Lock-out, Air spring	Hydraulic Rebound adjust, Remote Lock-out, Air spring	Hydraulic compression and Rebound adjust, Lock-out, Air spring	Hydraulic Rebound adjust Remote Lock-out, Air spring	Hydraulic compression and Rebound adjust, Lock-out, Air spring	Hydraulic Rebound-adjust Remote Lock-out, Air spring	Hydraulic compression and Rebound adjust, Lock-out, Air Spring
Damper	OCR		OCR				OCR			
Spring	Air		Air				Air			
Adjustment	A, R, RL	A, R, L, C	A, R, RL	A, R, L, C	A, R, RL	A, R, L, C	A, R, RL	A, R, L, C	A, R, RL	A, R, L, C
Travel	60, 70, 80, 100, 120mm		60, 80 mm				80, 100, 120mm		60mm	
Fork offset (mm)	38mm		38mm				38mm			
Fork height (mm)	410 / 420 / 430 / 450 / 470		383 / 403				460 / 480 / 500		410	
Brake Type	Disc only		Disc or D+V brake				Disc Only			
Disc Brake Mount	Post		Post				Post			
Recommended Max. Rotor Size in mm	180		180				180			
Dynamo Bracket Mount	–		–				–			
Cable Guide for Hub Dynamo	–		–				–			
Roller Brake Mount	–		–				–			
Weight (kgs) (w/steerer at 200mm)	1.87	1.85	1.67	1.65	1.72	1.70	1.92	1.90	1.62	1.60
Wheel size	24"		20"				24"			
Recommended Max. Tire Width(mm)	56 (2.2 inch)		63 (2.4 inch)				66 (2.6 inch)		56 (2.2 inch)	
Origin of Production	Taiwan		Taiwan				Taiwan			

◆ Fixed rebound option

						Cargo			E-Bike			
	AERIAL 24			CAPA		PORTER		GARY	PULSE AIR 29-15		PULSE AIR 29	
	RL ◆	TNL ◆	MLC	MLC 24	T24, T20	T	15T	20T	RL ◆	TNL ◆	RL ◆	TNL ◆
	28.6mm 7050 Aluminum			28.6/25.4mm Steel		28.6mm 7050 Aluminum		28.6mm Steel	1.5" Tapered steerer Steel/ 7050 Aluminum		28.6mm Steel	
	–			–		–		–	–		Option	
	125mm			120mm		125mm		125mm	130mm		130mm	
	Aluminum Black			Aluminum Black		Aluminum Black		Aluminum Black	Aluminum Black		Aluminum Black	
	28.6mm Steel			25.4mm Steel		30mm Steel		28.6mm Steel	32mm Steel		30mm Steel	
	QPQ black			CP		CP		CP	QPQ black		QPQ black	
	Magnesium			Aluminum		Magnesium		Aluminum	Magnesium		Aluminum	
	9mm open dropout			9mm open dropout		9mm open dropout	15mm Blot Axle	9mm open dropout	15mm QR		9mm open dropout	
	Hydraulic Remote Lock-out, Air spring	Hydraulic Lock-out, Air spring	Mechanical Lock-out, Air spring	Mechanical Lock-Ou	–	–		–	Hydraulic Remote Lock-out, Air spring	Hydraulic Lock-out, Air spring	Hydraulic Remote Lock-out, Air spring	Hydraulic Lock-out, Air spring
	Hydraulic Cartridge		–	–		–		–	Hydraulic Cartridge		Hydraulic Cartridge	
	Air			Coil		Coil		Coil	Air		Air	
	A,RL	A,L	A,L	L, P	P	P		P	A,RL	A,L	A,RL	A,L
	60mm			24": 50mm	24"/20": 50mm	60, 80mm		50mm	50, 60mm		50, 60mm	
	38mm			38mm		38mm		43mm	51mm		51mm	
	410			24": 399	24/ 20": 393 / 373	383 / 403		373	460 / 470		470 / 480	
	Disc Only			Disc or D+V-brake		Disc or Disc & V-brake		Disc & V-brake	Disc only		Disc only	
	Post			IS		Post		IS	Post		Post	
	180			160		180		160	180		180	
	–			–		–		–	–		–	
	–			–		–		–	–		–	
	–			–		–		–	–		–	
	1.99	1.93	1.73	1.93	1.84/1.75	2.09	2.14	2.17	2.69	2.63	2.89	2.83
	24"			24"	24"/20"	20"		20"	29"		29"	
	56 (2.2 inch)			56 (2.2 inch)		63 (2.4 inch)		66 (2.6 inch)	61 (2.4 inch)		66 (2.6 inch)	
	Taiwan			China		Taiwan		China	Taiwan		Taiwan	

Bike Category	E-Bike							
Model	PULSE AIR 27.5-15		PULSE AIR 27.5		PULSE COIL 29		PULSE COIL 27.5	
	RL ◆	TNL ◆	RL ◆	TNL ◆	RL ◆	TNL ◆	RL ◆	TNL ◆
Steerer	28.6mm Steel		28.6mm Steel		28.6mm Steel		28.6mm Steel	
1.5" Steerer (Straigh or Taper)	Option		Option		Option		Option	
Crown	130mm		130mm		130mm		130mm	
	Aluminum Black		Aluminum Black		Aluminum Black		Aluminum Black	
Stanchion	32mm Steel		30mm Steel		30mm Steel		30mm Steel	
	QPQ black		QPQ black		QPQ black		QPQ black	
Lower	Magnesium		Aluminum		Aluminum		Aluminum	
	15mm QR		9mm open dropout		9mm open dropout		9mm open dropout	
Feature	Hydraulic Remote Lock-out, Air spring	Hydraulic Lock-out, Air spring	Hydraulic Remote Lock-out, Air spring	Hydraulic Lock-out, Air spring	Hydraulic Remote Lock-Out	Hydraulic Lock-out	Hydraulic Remote Lock-Out	Hydraulic Lock-out
Damper	Hydraulic Cartridge		Hydraulic Cartridge		Hydraulic Cartridge		Hydraulic Cartridge	
Spring	Air		Air		Coil		Coil	
Adjustment	A,RL	A,L	A,RL	A,L	RL, P	L, P	RL, P	L, P
Travel	60, 80, 100mm		50mm		50mm		50mm	
Fork offset (mm)	43mm		43mm		51mm		43mm	
Fork height (mm)	455 / 475 / 495		445		470		445	
Brake Type	Disc only		Disc only		Disc Only		Disc only	
Disc Brake Mount	Post		Post		Post		Post	
Recommended Max. Rotor Size in mm	180		180		180		180	
Dynamo Bracket Mount	–		–		–		–	
Cable Guide for Hub Dynamo	–		–		–		–	
Roller Brake Mount	–		–		–		–	
Weight (kgs) (w/steerer at 200mm)	2.38	2.32	2.81	2.75	2.90	2.84	2.82	2.76
Wheel size	27.5"		27.5"		29"		27.5"	
Recommended Max. Tire Width(mm)	61 (2.4 inch)		61 (2.4 inch)		66 (2.6 inch)		61 (2.4 inch)	
Origin of Production	Taiwan		Taiwan		Taiwan		Taiwan	

◆ Fixed rebound option

									Cross Trekking			
	VOGUE E				VIVAir E				VOGUE		VIVAir	
	Air TRL	Air	15 Air TRL	15 Air	RL ◆	TNL ◆	15 RL ◆	15 TNL ◆	Air TRL	Air	RL ◆	TNL ◆
	1.5" Tapered steerer 7050 Aluminum				28.6mm Steel				28.6mm 7050 Aluminum		28.6mm 7050 Aluminum	
	–				Option				Option		Option	
	130mm				130mm				120mm		120mm	
	Aluminum Black				Aluminum Black				Aluminum Black		Aluminum Black	
	30mm 7050 Aluminum				30mm Steel				28.6mm 7050 Aluminum		28.6mm Steel	
	Hard Anodize Black				QPQ black				Hard Anodize Black		QPQ black	
	Aluminum				Aluminum				Magnesium		Magnesium	
	9mm open dropout		15mm Blot Axle		9mm open dropout		15mm Blot Axle		9mm open dropout		9mm open dropout	
	Hydraulic Rebound adjust, Remote Lock-out, Air spring	Hydraulic compression and Rebound adjust, Lock-out, Air Spring	Hydraulic Rebound adjust, Remote Lock-out, Air spring	Hydraulic compression and Rebound adjust, Lock-out, Air Spring	Hydraulic Remote Lock-out, Air spring	Hydraulic Lock-out, Air spring	Hydraulic Remote Lock-out, Air spring	Hydraulic Lock-out, Air spring	Hydraulic Rebound adjust, Remote Lock-out, Air spring	Hydraulic compression and Rebound adjust, Lock-out, Air Spring	Hydraulic Remote Lock-out, Air spring	Hydraulic Lock-out, Air spring
	OCR				Hydraulic Cartridge				OCR		Hydraulic Cartridge	
	Air				Air				Air		Air	
	A, R, RL	A, R, L, C	A, R, RL	A, R, L, C	A, RL	A,L	A, RL	A,L	A, R, RL	A, R, L, C	A, RL	A, L
	50, 60, 80mm				50, 60, 80mm				50, 60, 80mm		50, 60, 80mm	
	44mm				44mm				44mm		44mm	
	460 / 470 / 490				460 / 470 / 490				460 / 470 / 490		460 / 470 / 490	
	Disc or D+V-brake				Disc or D+V-brake				Disc or D+V-brake		Disc or D+V-brake	
	Post				Post				Post		Post	
	180				180				180		180	
	Yes				Yes				Yes		Yes	
	Option				Option				Option		Option	
	No				No				No		No	
	2.25	2.23	2.30	2.28	2.80	2.74	2.85	2.79	1.80	1.78	2.23	2.17
	700C only				700C only				700C only		700C only	
	51 (2.0 inch)				51 (2.0 inch)				51 (2.0 inch)		51 (2.0 inch)	
	Taiwan				Taiwan				Taiwan		Taiwan	

Bike Category	Cross Trekking														
Model	VITA				VOLANT								NOVA		
	RL ◆	TNL ◆	MLC	T	RL ◆	TNL ◆	MLC	T	15 RL ◆	15 TNL ◆	15 MLC	15 T	RL ◆	TNL ◆	
Steerer	28.6mm Steel				28.6mm Steel								28.6mm Steel		
1.5" Steerer (Straigh or Taper)	Option				Option								–		
Crown	120mm				130mm								112mm		
	Aluminum Black				Aluminum Black								Aluminum Black		
Stanchion	28.6mm Steel				30mm Steel								28.6mm Steel		
	CP				CP								CP		
Lower	Magnesium				Aluminum								Aluminum		
	9mm open dropout				9mm open dropout				15mm Thru Blot Axle				9mm open dropout		
Feature	Hydraulic Remote Lock-out,	Hydraulic Lock-Out,	Mechanical Lock-Out	–	Hydraulic Remote Lock-out,	Hydraulic Lock-Out,	Mechanical Lock-Out	–	Hydraulic Remote Lock-out,	Hydraulic Lock-Out,	Mechanical Lock-Out	–	Hydraulic Remote Lock-out,	Hydraulic Lock-Out,	
Damper	Hydraulic Cartridge		–		Hydraulic Cartridge		–		Hydraulic Cartridge		–		Hydraulic Cartridge		
Spring	Coil				Coil								Coil		
Adjustment	RL, P	L, P	L, P	P	RL, P	L, P	L, P	P	RL, P	L, P	L, P	P	RL, P	L,P	
Travel	50, 60, 80mm				50, 60, 80mm								50, 60mm		
Fork offset (mm)	44mm				44mm								44mm		
Fork height (mm)	460 / 470 / 490				460 / 470 / 490								466 / 476		
Brake Type	Disc or D+V-brake				Disc or D+V-brake								Disc or D+V-brake		
Disc Brake Mount	Post				Post								IS		
Recommended Max. Rotor Size in mm	180				180								180		
Dynamo Bracket Mount	yes				Yes								Yes		
Cable Guide for Hub Dynamo	option				Option								Option		
Roller Brake Mount	No				No								No		
Weight (kgs) (w/steerer at 200mm)	2.41	2.35	2.13	2.13	2.80	2.74	2.51	2.51	2.86	2.80	2.56	2.56	2.62	2.56	
Wheel size	700C only				700C only								700C only		
Recommended Max. Tire Width(mm)	51 (2.0 inch)				51 (2.0 inch)								51 (2.0 inch)		
Origin of Production	China				China								China		

◆ Fixed rebound option

			NEON PLS				VERSE				NEON				URBAN			
	MLC	T	RL ◆	TNL ◆	MLC	T	RL ◆	TNL ◆	MLC	T	RL ◆	TNL ◆	ML	T	RL ◆	TNL ◆	MLC	T
			28.6mm Steel				28.6/ 25.4mm Steel				28.6/ 25.4mm Steel				28.6/25.4mm Steel			
			–				–				–				–			
			112mm				112mm				112mm				112mm			
			Aluminum Black				Aluminum Black				Aluminum Black				Aluminum Black			
			28.6mm Steel				28.6mm Steel				25.4mm Steel				25.4mm Steel			
			CP				CP				CP				CP			
			Aluminum				Aluminum				Aluminum				Aluminum			
			9mm open dropout				9mm open dropout				9mm open dropout				9mm open dropout			
	Mechanical Lock-Out	–	Hydraulic Remote Lock-out,	Hydraulic Lock-Out,	Mechanical Lock-Out	–	Hydraulic Remote Lock-out,	Hydraulic Lock-Out,	Mechanical Lock-Out	–	Hydraulic Remote Lock-out,	Hydraulic Lock-Out,	Mechanical Lock-Out	–	Hydraulic Remote Lock-out,	Hydraulic Lock-Out,	Mechanical Lock-Out	–
	–		Hydraulic Cartridge		–		Hydraulic Cartridge	–			Hydraulic Cartridge		–		Hydraulic Cartridge		–	
			Coil				Coil				Coil				Coil			
	L, P	P	RL, P	L,P	L, P	P	RL, P	L, P	L, P	P	RL, P	L, P	L, P	P	RL, P	L, P	L, P	P
			50, 60mm				40, 50mm				50, 60mm				40mm			
			44mm				44mm				44mm				44mm			
			466 / 476				450 / 460				460 / 470				450			
			Disc or D+V-brake				V-brake only				Disc or Disc+V-brake				Roller& Disc brake only, no V-brake available			
			IS				no				Post				IS			
			180				N/A				180				160			
			Yes				No				Yes				Yes			
			Option				Option				Option				Option			
			No				No				No				Yes			
	2.35	2.36	2.62	2.56	2.35	2.36	2.57	2.51	2.30	2.31	2.17	2.11	1.95	1.94	2.13	2.07	1.86	1.87
			700C only				700C only				700C only				700C only			
			51 (2.0 inch)				51 (2.0 inch)				51 (2.0 inch)				51 (2.0 inch)			
			China				China				China				China			

Model	SINGLE SHOCK					
	SS-M7-T	SS-M7	SS-M6-T	SS-M6	SS-A7-T	
Steerer	28.6mm 7050 Aluminum (210mm length min.)	28.6mm 7050 Aluminum (210mm length min.)	28.6mm 7050 Aluminum (210mm length min.)	28.6mm 7050 Aluminum (210mm length min.)	28.6mm 7050 Aluminum (Optional 1.5" tapered steerer) (210mm length min.)	
Lower	Magnesium	Magnesium	Magnesium	Magnesium	Aluminum	
	9mm open dropout	9mm open dropout	9mm open dropout	9mm open dropout	9mm open dropout	
Feature	Mag. blade Spring preload	Mag. blade	Mag. blade Spring preload	Mag. blade	Alu. Blade Spring preload	
Spring	Coil with bumper	Coil with bumper	Coil with bumper	Coil with bumper	Coil with bumper	
Adjustment	P	–	P	–	P	
Travel	30mm	35mm	30mm	35mm	30mm	
Fork offset (mm)	43mm	43mm	43mm	43mm	43mm	
Fork height (mm)	475	470	440	435	478.5	
Brake Type	Disc & V-brake (Optional Roller Mount)				Disk only or Disc & V-brake (Optional Roller Mount)	
Disc Brake Mount	IS				Post	
Recommended Max. Rotor Size in mm	160				180	
Dynamo Bracket Mount	yes				yes	
Cable Guide for Hub Dynamo	yes				yes	
Roller Brake Mount	Option				Option	
Weight (kgs) (w/steerer at 200mm)	1.33	1.33	1.18	1.18	1.70	
Wheel size	700C		26"		700C	
Recommended Max. Tire Width(mm)	45 (1.75 inch)		45 (1.75 inch)		51 (2.0 inch)	
Origin of Production	Taiwan				Taiwan	

						SINGLE SHOCK
	SS-A7	SS-A4-T	SS-A4	SS-A2-100	SS-A2-75	PILOT
	28.6mm 7050 Aluminum (Optional 1.5" tapered steerer) (210mm length min.)	28.6mm 7050 Aluminum (210mm length min.)	28.6mm 7050 Aluminum (210mm length min.)	28.6mm 7050 Aluminum (210mm length min.)	28.6mm 7050 Aluminum (210mm length min.)	1.5" tapered steerer (210mm length min.)
	Aluminum	Aluminum	Aluminum	Aluminum	Aluminum	Aluminum
	9mm open dropout	9mm open dropout	9mm open dropout	9mm open dropout	9mm open dropout	9mm open dropout
	Alu. Blade	Alu. Blade Spring preload	Alu. Blade	Alu. Blade (straight) Dropout pitch 100mm	Alu. Blade (curve) Dropout pitch 75mm	Alu. Blade
	Coil with bumper	Coil with bumper	Coil with bumper	Coil with bumper	Coil with bumper	Coil with bumper
	–	P	–	–	–	–
	35mm	30mm	35mm	30mm	30mm	40mm
	43mm	43mm	43mm	38mm	34mm	45mm
	473.5	415	410	355	355	495
	Disk only or Disc & V-brake (Optional Roller Mount)	Disc & V-brake		Disc & V-brake	V-brake	Disk only (Optional Roller Mount)
	Post	IS		IS		IS
	180	160		160	–	160
	yes	yes		–	–	yes
	yes	yes		–	–	yes
	Option	–		–	–	Option
	1.70	1.45	1.45	1.32	1.28	1.70
	700C	24"		20"		700C
	51 (2.0 inch)	45 (1.75 inch)		38 (1.5 inch)		48 (1.75 inch)
	Taiwan	Taiwan		Taiwan		China

RST GLOBAL NETWORK

RST EUROPEAN TEST CENTRE SINGLTREK POD SMRKEM

http://www.singltrekpodsmrkem.cz/

RST E.CHINA JIANGSU, CHINA

Manufacturing (domestic)

RST HEADQUARTER, TAIPEI, TAIWAN

Product development, Global sales, Manufacturing

Email: rst@rst.com.tw

- RST Global office
- RST Global distributors
- RST EUROPEAN TEST CENTRE SINGLTREK

RST EUROPE OFFICE. STUTTGART, GERMANY

After-Sales Service, Marketing, Europe sales

Contact: Stephan Guddat

Email: info@rst-europe.eu

RST DISTRIBUTORS

ARGENTINA
Carlos Karabitian
Tel : 54-351-4936060
Fax: 54-351-4931003
carlos@karabitian.com.ar

AUSTRIA
Thalinger Lange GMBH
Tel : + 43-7242-497-0
mail@thalinger-lange.com

BRAZIL
LM BIKE
Tel :55-37-3262-5750
faleconosco@lmbike.com.br

CENTER AMERICA
DISTRIBUIDORA
OCHENTA Y SEIS S.A.
TEL : 506 4035 200
gmendez@d86group.com

CHILE
ANDES Industrial Ltd.
Tel : 56-2-265-03100
Fax: 56-2-719-1136
andes@andesindustrial.cl

COLOMBIA
LEN IMPORTACIONES LTDA
Tel : 57 7-6712222
silvia.romero@lenimp.com

CHINA
Suzhou Dawei Precision Co., Ltd.
Tel : 86-512-8616-0698
Fax: 86-512-8616-0100
services@rst-topway.cn

ESTONIA
VELOPLUS
Tel : 372 6556 974
info@veloplus.ee

FRANCE
RST-Paul Lange France SARL
Tel : 33 388 93-2101
info@paul-lange.fr

GERMANY
Paul Lange & Co.
Tel : 49-711-258802
info@paul-lange.de

GREECE
Nikos Maniatopoulos S.A.
Tel : 30-2610-993045
Fax: 30-2610-990424
info@idealbikes.net

HUNGARY
VELOBIKE Kft.
Tel: 36-1-455-8010

INDONESIA
PT BINTANG TIMUR
Tel : 021-6300555
Fax: 021-6336982
btng_tmr@yahoo.com

ISRAEL
Ranofun
Tel : 972-4-9522334
Mobil : 972-545600212
ranofun@gmail.com

ITALY
Ciclo Promo Components SPA
Tel :39-0423-1996363
info@ciclopromo.com

KOREA
MBS Corporation
Tel :82-55-265-9415
elfama@elfama.com

PHILIPPINES
Comet Cycle Center
Tel :+63 23725591
Fax:+63 23725590
comet@cometcycle.com

POLAND
Velo Sp. Z. O. O.
Tel : 48-32-232-83-77
office@velo.com.pl

PORTUGAL
Motokit
Tel :351-234-625607
motokit@motokit.com.pt

RUSSIA
MAXIMUM Ltd.
Tel :+7-812-740-79-62
maximum@msgbox.ru

RUSSIA
Arves Market Ltd.
Tel :+7-499-153-0721
Fax :+7-495-991-6888
arvesmarket@yandex.ru

SPAIN
Matxcycle S.L
Tel : +34 943 340415
pedidos@mycycle.eu

SWITZERLAND
Fuchs-movesa AG
Tel : +41 56 464 46 46
info@fuchs-movesa.ch

TAIWAN
RST GREENERGY
Technology Co.,Ltd.
Tel: 886-2-8521-2351
Fax: 886-2-8521-6159
rst@rst.com.tw

THAILAND
Asia international
Business&Sales Co., Ltd.
Tel : 66-2-887-7813-4
seema1@ksc.th.com

U.S.A
Quality Bicycle Products
Tel : 1-800-346-0004
sales@qbp.com

U.K.
Resurrection Cycle
Tel: 01792 421974
info@resurrectioncycles.co.uk

CZECH / SLOVAK REP.
Universe Agency spol. s.r.o
Tel : 420-244-990-777
info@author.cz

WWW.RSTSUSPENSION.COM

RST

GLOBAL NETWORK

TAIWAN
HEAD QUARTER

RST GREENERGY TECH. CO., LTD.
TEL +886.2.85212351 FAX +886.2.85216159
Email rst@rst.com.tw

EUROPE

RST EUROPE OFFICE
TEL +49.711.2588221 FAX +49.711.258827221
Email info@rst-europe.eu

CHINA

SUZHOUN DAWEI PRECISION CO., LTD.
TEL +86.512.86160698 FAX +86.512.86160100
Email services@rst-topway.cn

PHOTO ENDUROTEAM

Design by ARDE #107120H 2019.03@2500